The reciprocality between critical thinking and deep processing strategies: A longitudinal approach

Conference paper for the AARE, 2009, Canberra Australia

Huy P. Phan, PhD
Senior Lecturer in Educational Psychology, Learning and Teaching
School of Education, E7
Faculty of the Professions
The University of New England
Armidale, NSW 2351 AUSTRALIA
Telephone: (02) 6773 3327 (Int'l +61 2)
Fax: (02) 6773 2445 (Int'l +61 2)
Email: hphan2@une.edu.au

ABSTRACT

Research evidence indicates that critical thinking practice and study processing strategies act in concert to make a unique contribution to the prediction of academic performance. More recently, however, the research inquiry has concerned predominantly the direction of causal effects between critical thinking practice and study processing strategies. The present paper discusses a longitudinal study that examined the reciprocality between critical thinking and deep processing. Three waves of data were collected using two hundred and fourteen university students (127 women, 87 men). Various Likert-response questionnaires (e.g., Reflective Thinking Questionnaire) were used to measure critical thinking and deep processing strategies. Structural equation modeling using LISREL 8.72 showed that deep processing at T1 exerted a temporally displaced effect on critical thinking at T2; critical thinking at T2 also exerted a temporally displaced effect on deep processing at T3. There was little evidence to support the reciprocal effects model.

Key words: Critical thinking, deep processing strategies, reciprocality, longitudinal study

The reciprocality between critical thinking and deep processing strategies: A longitudinal approach

An emerging research interest in educational psychology concerns the relationship between reflection upon practice, study processing strategies, and effort (Leung & Kember, 2003; Phan, 2007). Study processing strategies, originating from the seminal work of Marton and Säljö (1976), involve deep and surface processing strategies. Reflective thinking originating from the work of John Dewey (1909/ 1933), is concerned with the consequences of ideas and with actions that may surmount a variety of personal and professional obstacles. Integrating the theoretical orientation of reflective thinking with the framework of motivation may help students become more vocal and critical in their learning. This paper reports on a longitudinal study that was conducted looking into the temporally displaced effects and direction of causality between critical thinking and deep processing strategies. In testing this theoretical and methodological issue, we proposed and analysed a structural equation model by means of LISREL.

Reflective thinking and study processing strategies: Theoretical overview

The study of reflective thinking practice derives from the works of Dewey (1909/1933) and Schön (1983, 1987). Reflective thinking practice is concerned with the consequences of ideas and the possibility that future physical actions may be used to solve a variety of personal and professional problems. In educational psychology research, interest has emerged in the study of reflective thinking practice as an antecedent of academic performance (Leung & Kember, 2003; Phan, 2007). In addition, research pertaining to reflective thinking practice has been extended to encompass the transformative education work of Mezirow (1991, 1998). According to Leung and Kember (2003), based on Mezirow's theoretical ideas, reflective thinking practice may be categorised into four distinct phases. In order of importance, these are: habitual action, understanding, reflection, and critical thinking. Habitual action is a mechanical and automatic activity that is performed with little conscious thought. Understanding is learning and reading without relating to other situations. Reflection concerns active, persistent, and careful consideration of any assumptions or beliefs grounded in our consciousness. Finally, critical thinking is considered a higher level of reflective thinking that involves us becoming more aware of why we perceive things, the way we feel, the way we act, and what we do.

In regards to study strategies, recent research studies (Dupeyrat & Mariné, 2005; Elliot, McGregor, & Gable, 1999; Fenollar, Román, & Cuestas, 2007) have extended the seminal work of Marton and Säljö (1976) to include two main types of study processing – deep and surface. According to Marton and Säljö, students differ in their approaches and processing of information. This theorisation suggests that students may adopt a deep approach to learning, with the intention of understanding the author's meaning and linking it to their prior knowledge and personal experience (Phan & Deo, 2007). By the same token, students may also engage in a surface approach to learning, whereby their main emphasis is on studying merely for the intention of reproducing information without any further attempt in analysis or understanding (Murphy & Tyler, 2005). Entwhistle and Tait (Entwhistle, 1997; Entwhistle & Tait, 1994; Tait & Entwhistle, 1996) have expanded this theoretical framework to infer two major processing strategies – deep and surface (Fenollar *et al*., 2007). In line with existing research studies (DeBacker & Crowson, 2006; Fenollar *et al*., 2007; Simons *et al*., 2004), we use the terms deep and surface processing in this paper.

Attempts to establish a relationship between study processing strategies and reflective thinking are ongoing, with only a few empirical studies published to date (Kember, Leung, Jones, Loke, McKay, Sinclair, Tse, Webb, Wong, Wong, & Yeung, 2000; Leung & Kember, 2003; Phan, 2007). The work of Leung and Kember (2003) with Hong Kong students is salient; they explored processing

strategies in concert with the four stages of reflective thinking. Confirmatory factor analysis indicated that surface processing is in line with habitual action, whereas deep processing is more associated with the other three types of reflective thinking. In a recent study, Phan (2007) used structural equation modeling to show that a surface processing strategy is predictive of habitual action, whereas a deep processing strategy is predictive of understanding and critical thinking. In contrast to this evidence, Phan's (2008a) study showed no predictive effects of study processing strategies on the four phases of reflective thinking. Likewise, in a study (Phan, 2009a) that included only deep processing strategies and reflection and critical thinking, the author reported no association between the three constructs.

A model of reciprocality

In terms of the different motivational variables under investigation, the issue of reciprocality between reflective thinking practice and study processing strategies is the most under-investigated area of inquiry in educational psychology research. Attempts have been made recently to explore the direction of causality between learning approaches and personal epistemology (Phan, 2008b). In the area of reflective thinking practice and study processing strategies, Leung and Kember's (2003) *CFA* study established the premise for further analysis and development into the theoretical and methodological issue of reciprocality.

The conceptual model that we have developed, as illustrated in Figure 1, is based on existing research findings pertaining to the relationship between reflective thinking practice and study processing strategies. This study, in contrast to previous correlational studies (Kember *et al*., 2000; Leung & Kember, 2003; Phan, 2007), attempts to explore within one conceptual model the direction of temporally displaced effects between deep processing strategies and critical thinking. Similar to Phan's (2009a) study, we limited our research focus to deep processing strategies and critical thinking as these two constructs have been found to exert positive effects on students' academic performance. Furthermore, an examination of relationship between these two constructs may provide relevant information that could discern the process of learning and motivation. In contrast, surface processing strategies and habitual action and understanding are more likely to exert negative effects on academic performance.

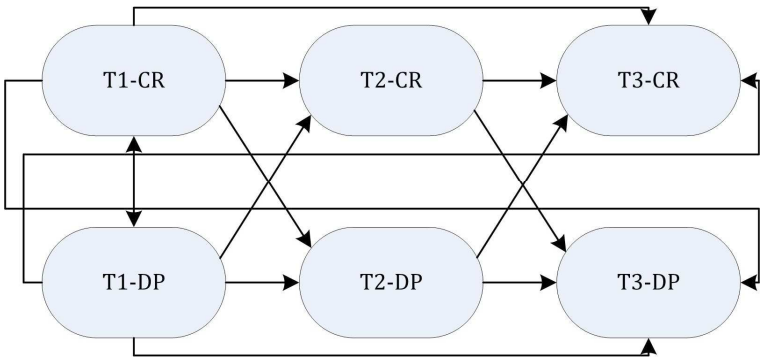

Figure 1: Test of reciprocal effects model.
Note: T1 = time 1, T2 = time 2, T3 = time 3; CR = critical thinking, DP = deep processing.

What is contentious at present is the direction of causality between deep processing strategies and critical thinking; for example, does critical thinking assist learners to learn and process classroom information at a deep level of understanding? One could also argue, in contrast, that the engagement of deep processing strategies in learning helps learners to reflect and critique upon

practice. This area of inquiry is inconclusive and subject to various theorisations. Leung and Kember's (2003) seminal study to date have shown the possibility that both theoretical orientations could interact in a dynamic system to influence each other. This conceptualisation is based on and reflects, similarly, the works that have been conducted in self-concept concerning the reciprocal effects model (Marsh, Byrne & Yeung, 1999; Marsh & Yeung, 1997; Valentine, DuBois, & Cooper, 2004).

Three waves of data collection were made in this study to explore the relations between critical thinking and deep processing. We used structural equation modeling to test the direction of temporally displaced effects between critical thinking and deep processing. Structural paths, originating from both constructs at Time 1 (T1) and ending at Time 3 (T3), included: stability paths between a particular construct at different time points (e.g., T1CR → T2CR; T1CR → T3CR)[1], adjacent paths between the two constructs (e.g., T1DP → T2CR), and non-adjacent paths between the two constructs (e.g., T1DP → T3CR). In total, there were six latent constructs, in this case critical thinking and deep processing, which were measured at T1, T2, and T3. Four measured indicators defined the latent critical thinking construct, whereas five indicators measured the latent deep processing construct.

In total, the *a priori* model postulated enables us to address the following questions:

RQ1: Does critical thinking make a direct causal contribution to the prediction of deep processing?

RQ2: Does deep processing make a direct causal contribution to the prediction of critical thinking?

RQ3: Do the two constructs – critical thinking and deep processing – operate to influence each other in a reciprocal manner?

Method

Participants

The sample consisted of 214 (127 women, 87 men) students enrolled in a curriculum studies course at a local university. Participation by the students was voluntary, and no remuneration was provided. Participants were instructed to write down their student number for the purpose of matching their information for the three occasions. The data[2] were collected on three occasions: Time 1 (July, 2006), Time 2 (Mid-March, 2007), and Time 3 (August, 2007). We purposively selected the time frame designated (2006/2007) to account for the possibility, that transition from one year to the next could facilitate critical thinking in students. Instruments were administered in tutorial classes with the assistance of an instructor.

Instrumentation

Participants were required to answer two scales – the Critical Thinking scale (4 items; for example: "This course has challenged some of my firmly held ideas") and the Deep Processing scale (5 items; for example: "I study the course material by underlying the most important part") from Kember *et al*.'s (2000) and Simons *et al*.'s (2004) instruments, respectively. Cronbach's alpha values for the critical thinking scale were .87 (Time 1), .91 (Time 2), and .92 (Time 3), and for the deep processing scale were .84 (Time 1), and .85 (Time 2 and Time 3).

---

[1] Note: T1 = time 1, T2 = time 2, T3 = time 3; CR = critical thinking, DP = deep processing.

[2] *Note: The academic calendar year starts in early February and ends early in December. Therefore, at time 1 (July, 2006), these students were in second year, whereas at Time 2 and Time 3, they were in third year.*

Statistical analysis

The conceptual model illustrated in Figure 1 was tested and analyzed using structural equation modeling (SEM) procedures. Descriptive statistics were calculated and preliminary analyses were carried out using SPSS 16.02. SEM is considered an appropriate statistical procedure as it enables examination of both direct and mediating effects between motivational variables and academic performance (Bollen, 1989; Byrne, 1998; Kline, 2005). Furthermore, SEM techniques have a strong theoretical grounding and empirical support, and allow the testing of competing models and/or refinement of an *a priori* model to fit the data. SEM as a statistical procedure is advantageous as it permits the researcher to test and evaluate competing *a priori* models simultaneously with the overall model fit being provided. The most common fit indexes that are recommended when reporting SEM analyses include: the chi-square statistic; the Steiger-Lind root mean square error of approximation (RMSEA; Steiger, 1990) with its 90% confidence interval; the Bentler comparative fit index (CFI; Bentler, 1990); and the non-normed fit index (NNFI; Bentler & Bonett, 1980).

We used LISREL-8.72 with covariance matrices and maximum likelihood (ML) procedures to test the structural equations. The statistical program LISREL-8.72 for the PC (similar to SPSS AMOS 7), developed by Jöreskog and Sörbom (2001), enables the testing of *a priori* models and provides various goodness-of-fit index values. We analyzed covariance matrices because correlation matrix analysis is known to involve potential problems, such as producing incorrect goodness-of-fit measures and standard errors (Byrne, 1998; Jöreskog & Sörbom, 2001). Furthermore, the ML procedure was chosen as it has been shown to perform reasonably well with multivariate normally distributed data (Chou & Bentler, 1995). A number of goodness of fit index values are calculated by LISREL; however, the three reported in this study are the CFI, the NNFI, and the RMSEA. Models with CFI and NNFI values close to .95 and RMSEA values below .05 are normally considered an indication of good model fit (Byrne, 1998).

Data analysis and Results

The *a priori* model tested contained 12 structural paths. A covariance matrix of the 27 observed variables was used as the database for subsequent analyses. Research has indicated the problem of autocorrelated measurement errors that often exist in longitudinal models (Guay, Boivin, & Hodges, 1999; Marsh & Yeung, 1997; Phan, 2008b). We addressed this problem by allowing the measurement error variances for the identical lagged observable indicators to be correlated through time. The correlation matrix between eta and ksi produced by LISREL is presented in Table 1.

Table 1: Correlation matrix of structural model (Figure 1).

	CRT2	DPT2	CRT3	DPT3	CRT1	DPT1
CRT2	1.00					
DPT2	.21	1.00				
CRT3	.93	.19	1.00			
DPT3	.26	.67	.23	1.00		
CRT1	.89	.22	.94	.20	1.00	
DPT1	.24	.51	.26	.66	.24	1.00

Note: Crit = critical thinking, Deep = deep processing; T1 = Time 1, T2 = Time 2, T3 = Time 3.

The results of this initial model showed a statistically significant chi-square, $\chi^2(284, N = 214) = 594.82$, $p < .05$, CFI = .95, GFI = .84, RMSEA = .07. Twelfth covariances between measurement errors were statistically nonsignificant and subsequently these errors were deleted one at a

time, and the model was re-estimated each time. Results of the final respecified model showed that the chi-square was significant, $\chi^2(296, N = 214) = 614.23$, $p < .05$, along with CFI = .95, GFI = .83, RMSEA = .07. The chi-square difference between the *a priori* model and the *a posteriori* model was statistically nonsignificant, $p > .05$[3]. Figure 2 illustrates the full structural model, with standardized structural paths statistically significant at $p < .01$. The complete structural model shows, in general, the significant stability (T1 → T3) paths for both critical thinking (β values ranging .46 to .78) and deep processing strategies (β values ranging from .31 to .65). Two adjacent structural paths were also found to be statistically significant: deep processing at Time 1 → critical thinking at Time 2 (β = .12), and critical thinking at Time 2 → deep processing at Time 3 (β = .19). Table 1 shows both factor loadings and standardised measurement errors between the measured indicators and the respective latent factors for the full structural models. Overall, for critical thinking across the three time points, the factor loadings ranged from .73 to .91, and for deep processing the factor loadings ranged from .52 to .96 (see Table 2).

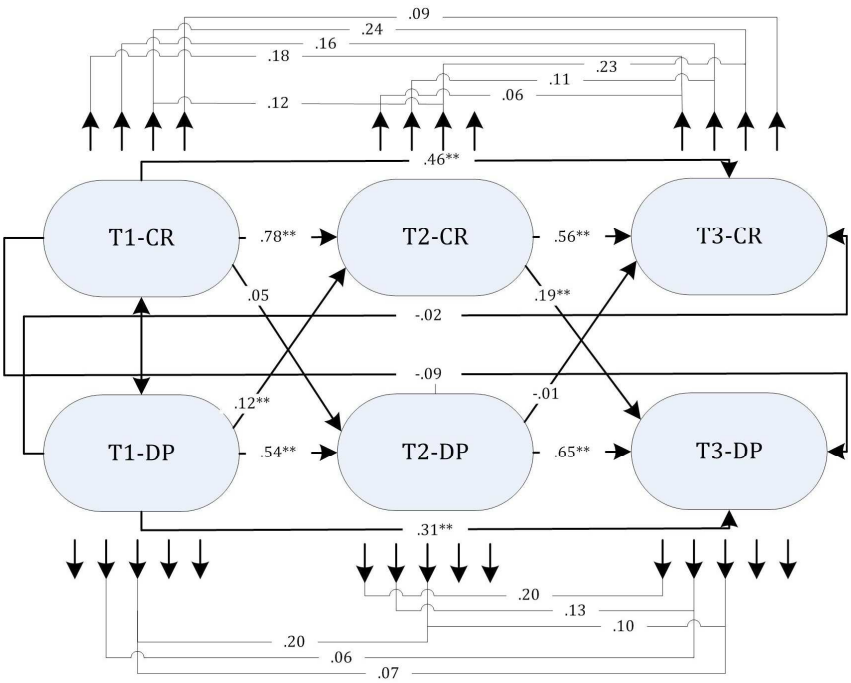

Figure 2: A full reciprocal effects model.
Note: * $t > 1.996$, ** $t > 2.556$.

Discussion

This study involved an examination of critical thinking and deep processing strategies within one conceptual model. In particular, causal modeling procedures were used to explore the direction of temporally displaced effects between the two theoretical orientations. In general, the evidence supports the hypothesised model in Figure 1. Below, results are discussed with reference to the final structural model, as illustrated in Figure 2.

This study provides, in general, two main premises: (1) support for the hypothesised model postulated previously, and (2) validate the psychometric properties of the critical thinking and deep

[3] *The $\Delta\chi^2$ statistic test between the a priori model and the a posteriori model was conducted for each measurement error that was deleted. In total, there were 12 separate models and $\Delta\chi^2$ statistic tested.*

processing scales. The evidence established has both methodological and practical implications. Methodologically, the validation of reciprocal relationship between critical thinking and deep processing in this study highlights the need for more stringent tests of causation using longitudinal data. As previously mentioned, studies (e.g., Leung & Kember, 2003; Phan, 2007) have to date used cross-sectional data and research design to explore the association between the two theoretical constructs. Our findings addressing previous limitations show that critical thinking acts as a determinant and outcome of deep processing strategies. Developmentally, the deep processing of information at the onset of learning may enable students to reflect and critique on their learning over time. Critiquing knowledge upon practice also facilitates in the deep processing of information over time. This temporally displaced relationship (DP → CR → DP) reflects the ongoing interactive process of both constructs in teaching and learning.

Table 2: Factor loadings and errors for the full structural model.

	Time 1				**Time 2**				**Time 3**			
	Loadings		**Errors**		**Loadings**		**Errors**		**Loadings**		**Errors**	
	Crit	Deep	Crit	Deep	Crit	Deep	Crit	Deep	Crit	Deep	Crit	Deep
S7	.76		.42									
S13	.78		.40									
S30	.73		.47									
S32	.89		.21									
S57		.79		.38								
S58		.86		.25								
S59		.91		.18								
S60		.52		.73								
S61		.95		.10								
S7					.86		.27					
S13					.87		.24					
S30					.82		.32					
S32					.86		.27					
S57						.75		.43				
S58						.88		.23				
S59						.91		.18				
S60						.95		.10				
S61						.96		.07				
S7									.86		.27	
S13									.87		.24	
S30									.80		.37	
S32									.91		.18	
S57										.85		.28
S58										.90		.19
S59										.90		.19
S60										.92		.16
S61										.93		.13

Note: Crit = critical thinking, Deep = deep processing. All loadings and errors are statistically significant at $t > 2.556$.

Furthermore, the evidence supports the psychometric properties of two subscales. A number of studies using both scales (critical thinking scale: Kember *et al*., 2000; Leung & Kember, 2003; Phan, 2007; and deep processing scale: Phan, 2008a, 2009; Simons *et al*., 2004) have reported good internal consistencies and construct validity for the measured items. Cronbach's alpha values and the factor loadings in Table 2 support the good construct validity and consistency of the two subscales across the three waves of data. For example, the factor loadings indicate that the two latent constructs – critical thinking and deep processing strategies – are well defined by the measured indicators.

From a practical perspective, this study has educational implications for the teaching and learning process. In the context of academic learning, the initial encouragement of deep learning is

instrumental in helping learners to critically reflect in their studying. A classroom environment that emphasises a deep learning structure is a goal for educators. Similar to the research area of goal structures (Ames, 1992; Anderman & Midgley, 1997; Urdan, 2004), it is salient that the classroom environment nurtures a deep learning approach. There are certain educational policies and practices at the classroom level that could foster growth for deep learning; for example, when teachers emphasise and evaluate individual growth in each student, thereby creating a mastery and deep learning structure in the classroom (Ames, 1992; Maehr & Midgley, 1996; Urdan, 2004). Orientation towards deep processing strategies set a premise in time for learners to reflect and critique in their learning.

The hypothesis that critical thinking serves as an initial basis for students to engage in deep processing strategies was not supported in this study. More importantly, the evidence highlighting the positive effect of deep processing (T1) on critical thinking (T2) contributes to the literature on reflective thinking practice and studying processing strategies (Leung & Kember, 2003; Phan, 2007, 2008a). The non-predictive effect of critical thinking on deep processing strategies may be explained in the context of students' engagement in classroom learning. Critical thinking is a complex level of reflective thinking practice that requires initiation, time, and effort. In fact, we speculate that many individuals would not reach this level of reflective thinking without some form of scaffolding and/or initiation. Classroom teaching and subject contents may be needed to help learners understand and comprehend information in a more analytical manner. Interest and encouragement to gauge and learn subject contents in a deep and mastery approach may facilitate learners to engage more in their own conscious beliefs, and to question various assumptions and ideas. This theorisation is speculative and further empirical validation is needed to clarify this reciprocal issue.

The study of processing strategies in motivational context from a longitudinal perspective has received limited attention. In a recent research study, for example, personal epistemology (at T1) was shown to exert a temporally displaced effect on study processing strategies (at T2)(Phan, 2008b). This evidence acknowledges the importance of different motivational variables affecting students' engagement in deep processing strategies at the outset of learning. Attempts to investigate the direction of temporally displaced effects between study processing strategies and various theoretical orientations (e.g., critical thinking, personal epistemology) are under-researched and more empirical evidence is needed. It is more than probable that critical thinking could, at the onset of learning, serve to influence a student's engagement in deep processing strategies. Further to this research contribution, structural equation modeling procedures may in many cases be 'quasi' or exploratory in their analyses (Byrne, 1998). Often, different *a priori* and *a posteriori* models tested, evaluated, and compared with each other to determine which model fits the data best. More research is needed to validate and confirm the structural relations found in this study.

Consistent with existing longitudinal research (e.g., Guay *et al*., 1999; Marsh, Byrne & Yeung, 1999; Marsh & Yeung, 1997; Phan, 2008b), the findings show the statistically significant stability structural paths. Theoretically, this evidence emphasises the formation of a construct over time. All stability paths for the two constructs across the three waves of data were found to be statistically significant.

Conclusion

In conclusion, the research reported in this paper involved examination of two major theoretical orientations over time. The amalgamation of these two separate strands of inquiry by researchers (Leung & Kember, 2003; Phan, 2007) has provided a basis for further advancement and research development in this area. In particular, this investigation is significant as it attempted to discern the direction of temporally displaced effects between critical thinking and deep processing strategies. There are a number of methodological and practical implications arising from this area of inquiry. Methodologically, our study supports the use of longitudinal data in non-experimental

research to make causal inference. From a practical perspective, this research study emphasizes the need to foster a deep learning structure in a classroom environment.

References

Ames, C. (1992). Classrooms: Goals, structures, and student motivation. *Journal of Educational Psychology, 84,* 261–271.

Anderman, E.M. & Midgley, C. (1997). Changes in personal achievement goals and the perceived classroom goal structures across the transition to middle level schools. *Contemporary Educational Psychology, 22,* 269–298.

Bentler, P.M. (1990). Comparative fit indexes in structural models. *Psychological Bulletin, 107,* 238–246. B

Bentler, P.M., & Bonett, D.G. (1980). Significance tests and goodness of fit in the analysis of covariance structures. *Psychological Bulletin, 88,* 588–606.

Bollen, K.A. (1989). *Structural equations with latent variables.* New York: Wiley.

Byrne, B. M. (1998). *Structural equation modeling with LISREL, PRELIS, and SIMPLIS: Basic concepts, applications, and programming*. Mahwah, NJ: Erlbaum.

Cano, F. (2005). Epistemological beliefs and approaches to learning: Their change through secondary school and their influence on academic performance. *British Journal of Educational Psychology*, 75, 203-221.

Chou, C. P. & Bentler, P. M. (1995). Estimates and tests in structural equation modeling. In R. H. Hoyle (Ed.), *Structural equation modeling: Concepts, issues, and applications*, (pp. 37-55). Thousand Oaks, CA: Sage.

DeBacker, T. K. & Crowson, H. M. (2006). Influences on cognitive engagement: Epistemological beliefs and need for closure. *British Journal of Educational Psychology*, 76, 535-551.

Dewey, J. (1933). *How we think: A restatement of the relation of reflective thinking to the educative process*. Boston: D.C Health (Original work published 1909).

Dupeyrat, C. & Mariné, C. (2005). Implicit theories of intelligence, goal orientation, cognitive engagement, and achievement: A test of Dweck's model with returning to school adults. *Contemporary Educational Psychology*, 30, 43-59.

Elliot, A. J., McGregor, H. A., & Gable, S. (1999). Achievement goals, study strategies, and exam performances: A meditational analysis. *Journal of Educational Psychology*, 91, 549-563.

Entwhistle, N. J. (1997). Reconstructing approaches to learning: A response to Webb. *Higher Education*, 33, 213-218.

Entwhistle, N. J. & Tait, H. (1994). *The Revised Approaches to Study Inventory*. Edinburgh University: Centre for Research into Learning and Instruction.

Fenollar, P., Román, S., & Cuestas, P. J. (2007). University student's academic performance: An integrative conceptual framework and empirical analysis. *British Journal of Educational Psychology*, 77, 873-891.

Guay, F., Boivin, M., & Hodges, E. V. E. (1999). Predicting change in academic achievement: A model of peer experiences and self-system processes. *Journal of Educational Psychology*, 9(1), 105-115.

Jöreskog, K. & Sörbom, D. (2001). *LISREL 8: User's reference guide* [software manual]. Chicago: Scientific Software.

Kember, D., Leung, D., Jones, A., Loke, A. Y., McKay, J., Sinclair, K., Tse, H., Webb, C., Wong, F. K. Y., Wong, M., & Yeung, E. (2000). Development of a questionnaire to measure the level of reflective thinking. *Assessment and Evaluation in Higher Education*, *25*, 381-389.

Kline, R.B. (2005). *Principles and practice of structural equation modelling* (2nd ed.). New York: Guildford.

Leung, D. Y. P. & Kember, D. (2003). The relationship between approaches to learning and reflection upon practice. *Educational Psychology*, 23(1), 61-71.

Maehr, M.L. & Midgley, C. (1996). *Transforming school cultures.* Boulder, CO: Westview.

Marsh, H. W., Byrne, B. M., & Yeung, A. S. (1999). Causal ordering of academic self-concept and achievement: Reanalysis of a pioneering study and revised recommendations. *Educational Psychologist*, 34, 154-157.

Marsh, H. W. & Yeung, A. S. (1997). Causal effects of academic self-concept on academic achievement: Structural equation models of longitudinal data. *Journal of Educational Psychology*, 89*,* 41-54.

Marton, F. & Säljö, R. (1976). On qualitative differences in learning – I: Outcome and process. *British Journal of Educational Psychology*, 46, 4-11.

Mezirow, J. (1981). A critical theory of adult learning and education. *Adult Education*, 32(1), 3-24.

Mezirow, J. (1991). *Transformative dimensions of adult learning*. San Francisco CA: Jossey-Bass.

Mezirow, J. (1998). On critical reflection. *Adult Education Quarterly*, 48, 185-198.

Miller, R. B., Greene, B. A., Montalvo, G. P., Ravindran, B., & Nichols, J. D. (1996). Engagement in academic work: The role of learning goals, future consequences, pleasing others, and perceived ability. *Contemporary Educational Psychology*, 21, 388-422.

Murphy, S. M. & Tyler, S. (2005). The relationship between learning approaches to part-time study of management courses and transfer of learning to the workplace. *Educational Psychology*, 25(5), 455-469.

Phan, H. P. (2006). Examination of student learning approaches, reflective thinking, and epistemological beliefs: A latent variables approach. *Journal of Research in Educational Psychology*, 10(4), 577-610.

Phan, H. P. (2007). Examination of student learning approaches, reflective thinking, and self-efficacy beliefs at the University of the South Pacific: A path analysis. *Educational Psychology*, 27(6), 789-806.

Phan, H. P. (2008a). Unifying different theories of learning: Theoretical framework and empirical evidence. *Educational Psychology*, 28(3), 325-340.

Phan, H. P. (2008b). Predicting change in epistemological beliefs, reflective thinking, and learning approaches: A longitudinal study. *British Journal of Educational Psychology*, 78, 75-93.

Phan, H. P. (2009a). Exploring students' reflective thinking practice, deep processing strategies, effort, and achievement goals. *Educational Psychology*.

Phan, H. P. (2009b). Amalgamation of future time orientation, epistemological beliefs, achievement goals and study strategies: Empirical evidence established. *British Journal of Educational Psychology*, 79, 155-173.

Phan, H. P. & Deo, B. (2007). The revised learning process questionnaire: A validation of a Western

model of students' study approaches to the South Pacific context using confirmatory factor analysis. *British Journal of Educational Psychology*, 77, 719-739.

Pintrich, P. R., Smith, D., Garcia, T., & McKeachie, W. J. (1991). A manual of the Motivated Strategies for Learning Questionnaire (MSLQ). National Center for Research to Improve Postsecondary Teaching and Learning. Ann Arbor: University of Michigan.

Schön, D. (1983). *The reflective practitioner: how professionals think in action*. New York, Basic Books.

Schön, D. (1987). *Educating the reflective practitioners*. San Francisco, CA: Jossey-Bass.

Seifert, T. L. & O'Keefe, B. A. (2001). The relationship of work avoidance and learning goals to perceived competence, externality and meaning. *British Journal of Educational Psychology*, 71, 81-92.

Simons, J., Dewitte, S., & Lens, W. (2004). The role of different types of instrumentality in motivation, study strategies, and performance: Know why you learn, so you'll know what you learn! *British Journal of Educational Psychology*, 74, 343-360.

Smith, N. & Miller, R. J. (2005). Learning approaches: Examination type, discipline of study, and gender. *Educational Psychology*, 25, 43-53.

Steiger, J.H. (1990). Structural model evaluation and modification: An interval estimation approach. *Multivariate Behavioral Research, 25,* 173–180.

Tabachnick, B. G. & Fidell, L. S. (2001). *Using multivariate statistics* (4th ed.). New York: HaperCollins.

Tait, H. & Entwhistle, N. J. (1996). Identifying students at risk through ineffective study strategies. *Higher Education*, 31, 97-116.

Urdan, T. (2004). Using multiple methods to assess students' perceptions of classroom goal structures. *European Psychologist*, 9(4), 222-231.

Valentine, J. C., DuBois, D. L., & Cooper, H. (2004). The relations between self-beliefs and academic achievement: A systematic review. *Educational Psychologist*, 39, 111-133.

Zimmerman, B. J. & Risemberg, R. (1997). Self-regulatory dimensions of academic learning and motivation. In G. Phye (Ed.), *Handbook of academic learning*, pp. 105-125. New York: Academic Press.