# *The impact of values and learning approaches on achievement: Do gender and academic discipline make a difference?*

Petra Lietz, Australian Council for Educational Research (lietz@acer.edu.au)
Liudmila Tarabashkina, Jacobs University Germany (l.tarabashkina@jacobs-university.de)

## Abstract

This paper presents results from a longitudinal study of sojourner students which was conducted at an international university in Germany from 2004 to 2007. The study followed one cohort of undergraduate students from the first week of their studies to graduation from their Bachelor of Science or Bachelor of Arts degree. Participants completed three questionnaires at the beginning of each year: the Portrait Value Questionnaire (PVQ) (Schwartz et al. 2001), the Study Process Questionnaire (SPQ) (Biggs 1987), and the Student Background Questionnaire (Matthews, Lietz & Darmawan 2007). Structural Equation Modelling (SEM) was used to examine how personal values influenced students' learning approaches (achieving, deep, or surface) and how these, in turn, impacted upon students' academic achievement. Furthermore, it was examined how robust these relationships were once gender and discipline area (i.e. Social Sciences or Natural Sciences) were included in the models and whether or not they changed over time.

First, results showed differences in term of which personal values were related to the three learning approaches and a certain consistency of these relationships at the beginning, the middle and the end of students' undergraduate studies. Second, whereas the deep and achieving learning approaches resulted in higher achievement students who displayed more characteristics of the surface learning approach showed lower achievement. Finally, analyses using data from all three occasions showed that while some differences emerged as regards the specific personal values related to the different learning approaches, the positive impact of the achieving and the deep approach on achievement, the higher performance of female students and the predominant absence of effects of academic discipline on learning approaches or achievement were the same over the three-year period.

**Keywords:** Sojourner students, learning approaches, personal values, academic discipline, gender differences, academic achievement

## Introduction

Much research has been undertaken to examine the composition and structure of personal values on the one hand (e.g. Allport 1924, Feather 1975, Rokeach 1973 Schwartz, 1994a, 1994b) and learning approaches on the other hand (e.g. Biggs 1987a, 1987b, Marton & Säljö 1976a, 1976b). Based on these developments, educational studies have attempted to explore the way in which personal values and learning approaches are related. Thus, for example, Ng and Renshaw (2002, 2003) correlated achievement goals with personal values that were assumed to influence achievement. Results of their research showed that mastery goals were associated with motivations or engagement patterns and strategies that were consistent with a deep approach to learning. This approach was related to positive learning outcomes. In contrast, performance goals were associated with motivations and strategies that tended to be superficial in nature and consistent with a surface approach to learning that yielded a lower level of achievement. This relationship has been confirmed by a number of studies (Chan 2002; Grant and Dweck 2001; Hau and Salili 1996; Lai and Biggs 1994; Salili 1996; Watkins 2003; Wilding and Andrews 2006).

Matthews (2004) also found that values were related to different approaches to learning. In her study of sojourner students in Australia who had low Integrity values showed a preference for surface learning with a strong positive correlation to the achieving motive whereas students who were low in values associated with the Confucian ethos showed a positive preference for the deep strategy and achieving motive subscales in their approach to learning.

Matthews, Lietz and Darmawan (2007) showed that particular personal values were associated with specific learning approaches. By way of canonical correlation analysis, they related the ten values as postulated by Schwartz et al. (2001) to Biggs' (1987a) six subscales that formed the three learning approaches. The values of achievement and power mainly related to the achieving approach, security and tradition values to the surface approach, and self-direction and universalism mainly related to the deep learning approach.

In addition to exploring the link between values and learning approaches, other studies examined the relationships between learning approaches and achievement as well as the effect of gender and academic discipline on these relationships. With respect to gender, for example, Picou, Gatlin-Watts and Packer (1998) found that female students had a preference for factual over abstract concepts and a tendency to break down problems into logical steps to a greater extent than did male students. In addition, Rouse and Austin (2002) reported that high-achieving female students had higher scores than high-achieving male students across the academic domains measuring learning and on subscales measuring homework effort and information seeking behaviour. Cano (2005) showed that older female students tended to score higher on the deep and achieving approaches to learning than younger male students. However, he noted that these results may have been tempered by academic demands such as a dense curriculum and time limitations.

Other studies have focused on whether or not approaches to learning are linked to the nature of the task of various academic disciplines. Here, Jones, Reichard and Mokhtari (2003) assessed the preferences of 105 college students in terms of approaches to learning in English, mathematics, science and social sciences. Results indicated that students varied their approaches to learning significantly depending on which of the four disciplines they were studying. Specifically, when studying science, students reported using active experimentation most, while concrete experience was mainly reported when studying English composition. For the social sciences, students reported using reflective observation and abstract conceptualization more often than when they were studying English, mathematics or science.

Differences in learning approaches between different disciplines, was also reflected in the norming of the SPQ (Biggs 1987b) where science students had a higher raw score on items measuring the surface approach than arts students. Likewise, science students attained a higher raw score than arts students for the achieving strategy.

Smith and Miller (2005) investigated the learning approaches of 248 students enrolled in business or psychology. Results showed significant differences in learning approaches between disciplines. Psychology students had significantly higher scores than business students on the deep motive and deep strategy subscales. In contrast, business students scored significantly higher on the surface motive and surface strategy subscales. A more differentiated picture was reported by Watkins and Hattie (1981) who found an interaction effect between gender, discipline area and learning approaches. Here, differences in learning approaches between disciplines were related to gender.

Many studies have also investigated changes in learning approaches over time with results differing for different learning approaches. Thus, Gow and Kember (1990) found that students at the beginning of their studies appeared to prefer an achieving approach compared to students who were further advanced in their studies. In addition, the more time that had elapsed since leaving school the less students displayed characteristics of the surface approach. Kember (2000) found similar changes with respect to the deep learning approach whereby first-year students showed significantly higher scores on this approach to learning than second and third year students. Likewise, Cano (2005) reported a significant decline from junior to senior high school in the deep and the surface approaches to learning for both boys and girls. Biggs (1987b) reported some changes in learning approaches. He observed a general decline in the deep approach from the first to final year of study in a sample of undergraduate students in Australia but no significant changes in the other learning approaches. He suggested that this decline was a consequence of the high workload which students experienced that resulted in a pragmatic reduction of the motives and strategies associated with deep learning. Zeegers (2001) followed 200 students in a chemistry class over a 30-month period and tested them on five occasions. Results showed a significant decline in the achieving strategy. A significant increase in the surface strategy was also noted over the time of the study. For the deep approach no statistically significant changes emerged over time.

The focus of these studies was the examination of change over time in learning approaches whereas few studies have attempted to examine how the effects of variables such as gender and discipline area on learning approaches change over time. One of these studies was conducted by Watkins and Hattie (1985) who followed a longitudinal design that collected data from the same students in their first and third year of study. The main effects on learning orientations of gender and the faculty in which students were enrolled remained significant between the two occasions while no interaction effects for these variables were found on either occasion. However, their analyses involved the examination of data from the two occasions only. As the current study collected information from the same students on three occasions it provides a more comprehensive picture of the variables of interest over time.

In the context of this prior research, the current study seeks to address the following questions:

1. At the end of their undergraduate studies, how do students' personal values relate to learning approaches? Are there differences in the relationships depending on the type of learning approach?
2. Did the relationships between values and learning approaches change over time?
3. At the end of their studies, how are students' learning approaches affecting academic achievement?
4. Did any effects of learning approaches on achievement change over time?
5. At the end of their undergraduate studies, do the relationships between values and learning approaches and their effect on achievement remain similar once gender and academic discipline are taken into account?
6. Did the patterns in relationships between values, learning approaches, gender and academic discipline change over time?

## Data and method

### *Sample*

The sample for this study consisted of a cohort of international students who started their three-year Bachelor of Arts or Bachelor of Science degree at a university in Germany, where English was the language of instruction, in September 2004. Of the cohort, 137 students participated in 2004, 155 in 2005, and 116 in 2006 with 88 students taking part on all three occasions and 153 students participating on two of the three occasions.

Forty-two per cent of the sample was female students and 58 per cent were male students. About two thirds of the students (69%) were enrolled in the School of Engineering and Sciences (SES), that offered majors in the natural sciences, mathematics as well as electrical engineering and computing while about one third (31%) was enrolled in the School of Humanities and Social Sciences (SHSS) that offered majors in the arts and literature, history, psychology as well as integrated social sciences – a combination of economics, studies of the mass media, politics, and sociology.

The mean age of the students was 20 years with the minimum of 17 and maximum of 24 years. The majority of students (around 54%) came from Eastern Europe, predominantly Bulgaria and Romania, followed by students from Western Europe (Austria and Germany), (10.9%), India (10.9%), and Sub-Saharan Africa (8.8%).

### *Materials*

Learning approaches were measured using the *Study Process Questionnaire* (SPQ, Biggs 1987b) whose structure and stability has been more recently been investigated (Fox et al. 2001).

The SPQ comprised 42 items aimed at measuring the achieving, the deep and the surface approach to learning. Each of the three approaches, in turn, consisted of two subscales, namely the achieving motive and achieving strategy, the deep motive and strategy and the surface motive and strategy, each measured by seven items to which participants had to respond on a five-point Likert-type scale with values ranging from '1' (rarely true) to '5' (almost always true). The internal reliabilities as indicated by Cronbach's alpha (α) of the subscales were 0.77 for achieving motive, 0.75 for achieving strategy, 0.62 for deep motive, 0.70 for deep strategy, 0.72 for surface motive and 0.76 for surface strategy. These reliability coefficients were similar to those reported for the SPQ by Biggs (1987b).

In addition, participants completed the *Portrait Value Questionnaire* (PVQ, Schwartz et al. 2001) which was composed of 40 items. These items were designed to measure the ten value dimensions developed by Schwartz (1994a, 1994b) namely self-direction, stimulation, hedonism, achievement, power, security, conformity, tradition, benevolence, and universalism. Participants responded to each item on a six-point Likert-type scale ranging from '1' (not like me at all) to '6' (very much like me). The questionnaire was administered in two versions, one for female and one for male students, which were identical except for the words that indicated the gender of the respondents (he/she, his/her). The internal reliabilities in terms of Cronbach's alpha (α) for this instrument were 0.70 for benevolence, 0.70 for universalism, 0.60 for self-direction, 0.68 for stimulation, 0.65 for hedonism, 0.79 for achievement, 0.82 for power, 0.66 for security, 0.71 for conformity and 0.68 for tradition. These reliabilities are in line with those reported by other researchers who have used the

Schwartz Value Survey (e.g. Oliver and Mooradian 2002) where coefficients ranged from 0.58 for tradition to 0.82 for power.

As students in the present sample came from more than 40 countries, allowance was made for differences in individuals' use of the response scale to the value items[1] through the use of centered scores as recommended by Schwartz (2007). These centered scores were used in the subsequent analyses. In addition, Schwartz (2007) recommended working with only up to eight of the ten values in regression analyses for reasons of multicollinearity and exact linear dependency of the ten values. Hence, it was decided to drop two values, namely benevolence and power as possible predictors from the analyses as they had been shown in previous multivariate analyses (Lietz and Matthews 2006) not to influence learning approaches or achievement, most likely because their effects are subsumed by the proximal values, namely achievement (for power) and universalism (for benevolence).

*Student background questionnaire*. Questions in the student background questionnaire aimed at obtaining information on factors that were previously found to influence learning approaches, such as age, gender and country of origin. Some questions were adapted from existing sources (Oppenheim 1992; Ong and Ward 2005).

Students' achievement was operationalised by way of their grade points average (GPA) at the end of the first semester. It should be noted that, at this university, a lower GPA denoted higher performance with a possible range of '1.00' indicating very good performance to '5.00' indicating unsatisfactory performance.

The respondents answered the questions regarding all learning approaches, strategies, motivation, and values. Therefore, instead of splitting the students in specific groups depending on the learning approach they use, current project examined overall relationships between personal values and learning approaches. This strategy is particularly useful in the Jacobs University Bremen's setting, where undergraduate students are required to take elective courses from other academic fields and schools (School of Humanities and Social Sciences and School of Engineering and Science) in order to graduate. The courses they were taking varied both in the terms of tasks and expectations, requiring different learning strategies and motivation on the students behalf (e.g. more memorization for natural sciences courses). In addition, prior research indicated that students' approaches to learning are quite dynamic and vary depending on the individual perceptions of the learning context, workload demands, and task difficulty (Gibbs 1992; Ramsden 1984; Trigwell and Prosser 1991). Provost and Bond (1997), therefore, argued that a successful student would be the one who chooses to use the strategies that best match the task at hand.

### *Method*

As was briefly mentioned above, the data were analysed using Structural Equation Modelling (SEM) – a multivariate statistical technique, which combines the aspects of factor analysis and multiple regression and examines series of interrelated dependence relationships simultaneously (Hair, Black, Babin, Anderson & Tatham

[1] Compute each individual's total score on all value items and divide by the total number of items (56 or 57). I call this the MRAT (Mean RATing for the particular individual). Center scores of each of the items for an individual around that individual's MRAT. Then compute scores for the 10 values by taking the means of the centered items. Use these centered value scores in correlations.

2006). Many of the technique's advantages include: modelling of the latent construct from the observed variables; better representation of theoretical constructs; assessment of the measurement errors, estimation of the whole model, availability of goodness-of-fit indices and the ability to model all parts of a model, including error variances (Hair et al. 2006, Kline 2005).

Of particular relevance for the current study were two aspects of this analytical technique. First, each learning approach could be modelled as a second order factor based its constituent strategy and motive, which reflected the theoretical considerations and prior research (Kember, Biggs & Leung 2004) on the structure of learning approaches. Second, the technique provided the possibility to conduct analyses of factorial invariance which enabled the testing of the robustness of the relationships between variables in the model across the three years for which data were available.

SEM is based on the analysis of covariance (Kline 2005) and the overall fit of the model is calculated based on the difference between the observed and estimated covariance matrices (Hair, Black, Babin, Anderson & Tatham 2006). Hu and Bentler (1999) recommended using two measures for estimating model's goodness of fit. They are Comparative Fit Index (CFI) with a cut-point above 0.95 and Standardized Root Mean Squared Residual (SRMR) which should be below 0.08 for a good fit. These indices are expected to control both Type I and Type II errors. In addition, the Root Mean Square Error of Approximation (RMSEA) will also be reported. It represents a "badness-of-fit" measure and account for the approximation error, the one which concerns the lack of the researcher's model to the population covariance matrix (Kline 2005). However, in order to ensure more sound interpretation of the results, the advice by Hair et al. (2006) was followed concerning the cut off points, which take into the account both the number of variables used in the model and the sample size (RMSEA $< 0.08$, CFI $> 0.92$, and SRMR $< 0.09$). The AMOS software which is available as part of SPSS, a statistical software package for the social sciences, was used in all stages of the analysis.

All analyses were undertaken for each learning approach, namely the achieving, the deep and the surface approach, separately and proceeded in three stages. First, an analysis was conducted to ascertain how personal values were related to the respective learning approach and only significant relationships were retained. Second, gender and school (i.e. whether students were enrolled in the School of Science and Engineering studying towards a BSc or in the School of Social Science studying towards a BA) were introduced as predictors of the learning approach and achievement. The purpose of this was to examine whether the learning approach or the achievement level differed between male and female students and between students from the "hard" and the "soft" sciences. Again only significant effects were retained. For the first and second step, data from 2006, which marked the students' final year of study, were used as they were considered to reflect a "consolidated" picture. In the third and final step, models for each learning approach were examined using data from the three occasions on which data collection had occurred, namely 2004, 2005 and 2006 in order to examine changes in the interrelationships between the variables in the analysis.

## Results

Results will be presented in the order in which they address the research questions.

1. *At the end of their undergraduate studies, how do students' personal values relate to learning approaches? Are there differences in the relationships depending on the type of learning approach?*

Results showed that different personal values were linked to the achieving, deep and surface learning approaches. For the achieving approach (Figure 1), only hedonism and achievement emerged as values that were linked in a substantive way to this learning approach. A very strong positive effect emerged from the achievement value to the achieving learning approach indicating that students who identified strongly with the achievement value also displayed high levels of strategies and motivation that characterize the achieving approach. Hedonism, on the other hand, had a negative effect on the achieving learning approach which meant that those students who valued having fun and a good time were less likely to follow the achieving approach.

As regards the deep approach to learning (Figure 1), the personal values of self-direction, achievement and hedonism emerged as significant correlates. The positive effects of self-direction and achievement indicated that students who identified more with these values displayed more of the strategies and motivation associated with the deep learning approach. As was the case for the achieving approach, hedonism had a negative effect which meant that students who valued having fun and a good time more highly followed the deep learning approach to a lesser extent.

For the surface approach to learning (Figure 1) five personal values emerged as being significantly linked, namely, universalism, self-direction, hedonism, conformity and tradition. Here, the negative signs for universalism and self-direction meant that students who valued the common good for all less and who had less interest in being self-directed followed the surface approach to a greater extent. The positive effects for hedonism, conformity and tradition meant that students who enjoyed having a good time more, and subscribed more to doing as they were told and to ways in which things used to be done displayed strategies and motives associated with the surface approach to a greater extent.

2. *Did the relationships between values and learning approaches change over time?*

As is illustrated in Figure 2, changes occurred over time in terms of which personal values related to the achievement approach to learning. As reported in the previous section, only two values, namely hedonism and achievement, were substantively related to the achieving approach in 2006. While these two values were also significantly linked to the achieving approach in 2004 and 2005, other values emerged in addition as being important in those years. In 2004, self-direction, stimulation, security, conformity and tradition were related to the learning approach. Thus, students who valued independent thought, a feeling of security, creativity and exploration, seek excitement, liked to follow rules and accepted customs more readily were more likely to display strategies and motives of the achieving approach. In 2005, except for conformity, which seized to have a significant effect, the nature of the relationship between the values and the learning approach remained similar to the one observed for 2004. As the model showed, security and stimulation emerged

as the second pair of values with high regression weights after achievement and hedonism. While this emphasized again the importance of seeking excitement, it highlighted the effect of valuing safety, harmony and stability on the achieving approach in that year.

**Figure 1** *Personal values and the achieving, deep and surface approach to learning, 2006 (n=106)*

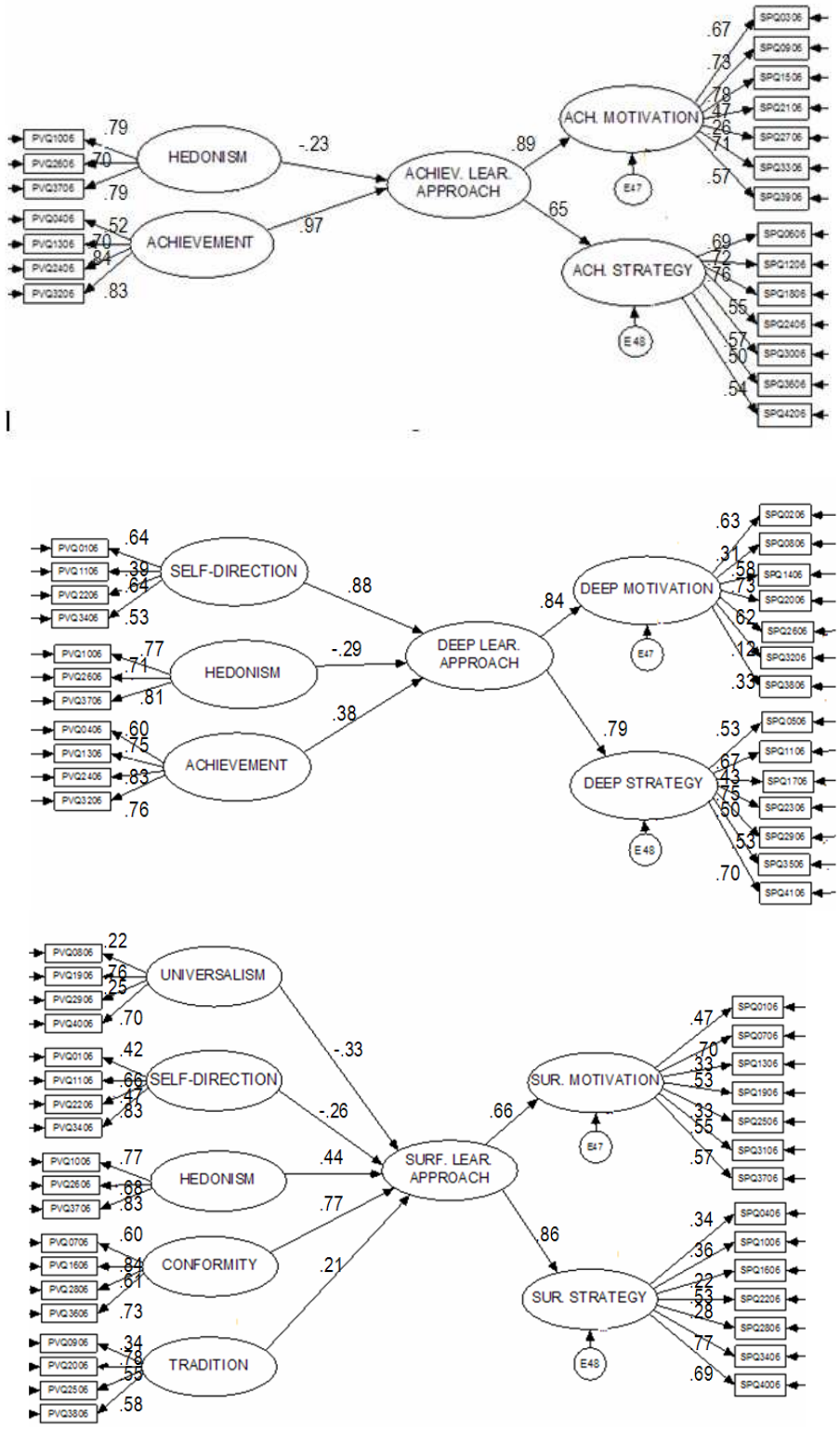

**Figure 2** *Personal values and the achieving approach to learning, 2004 (n=116); 2005 (n=115), 2006 (n=106)*

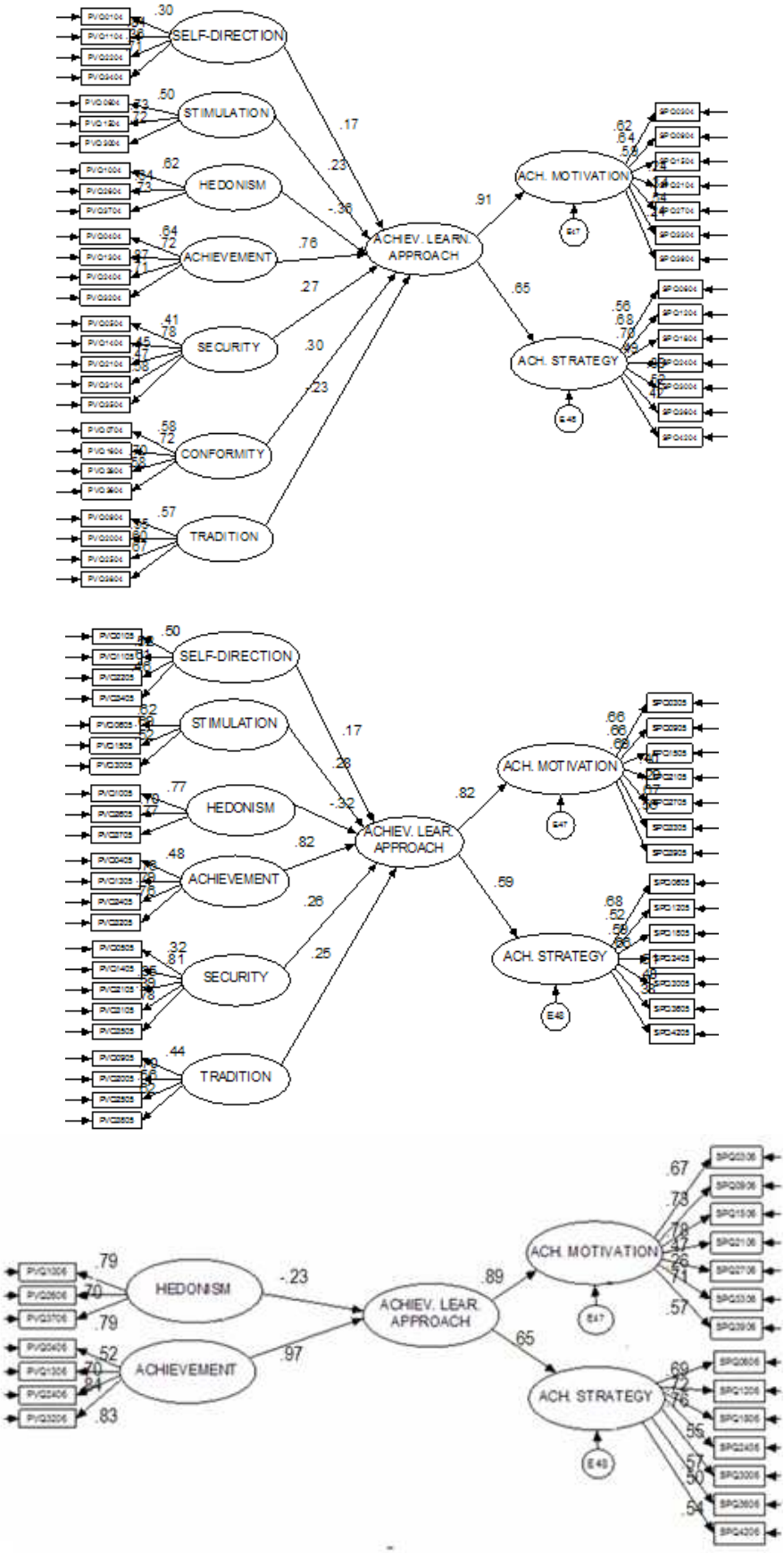

**Figure 3** *Personal values and the deep approach to learning, 2004 (n=116); 2005 (n=115), 2006 (n=106)*

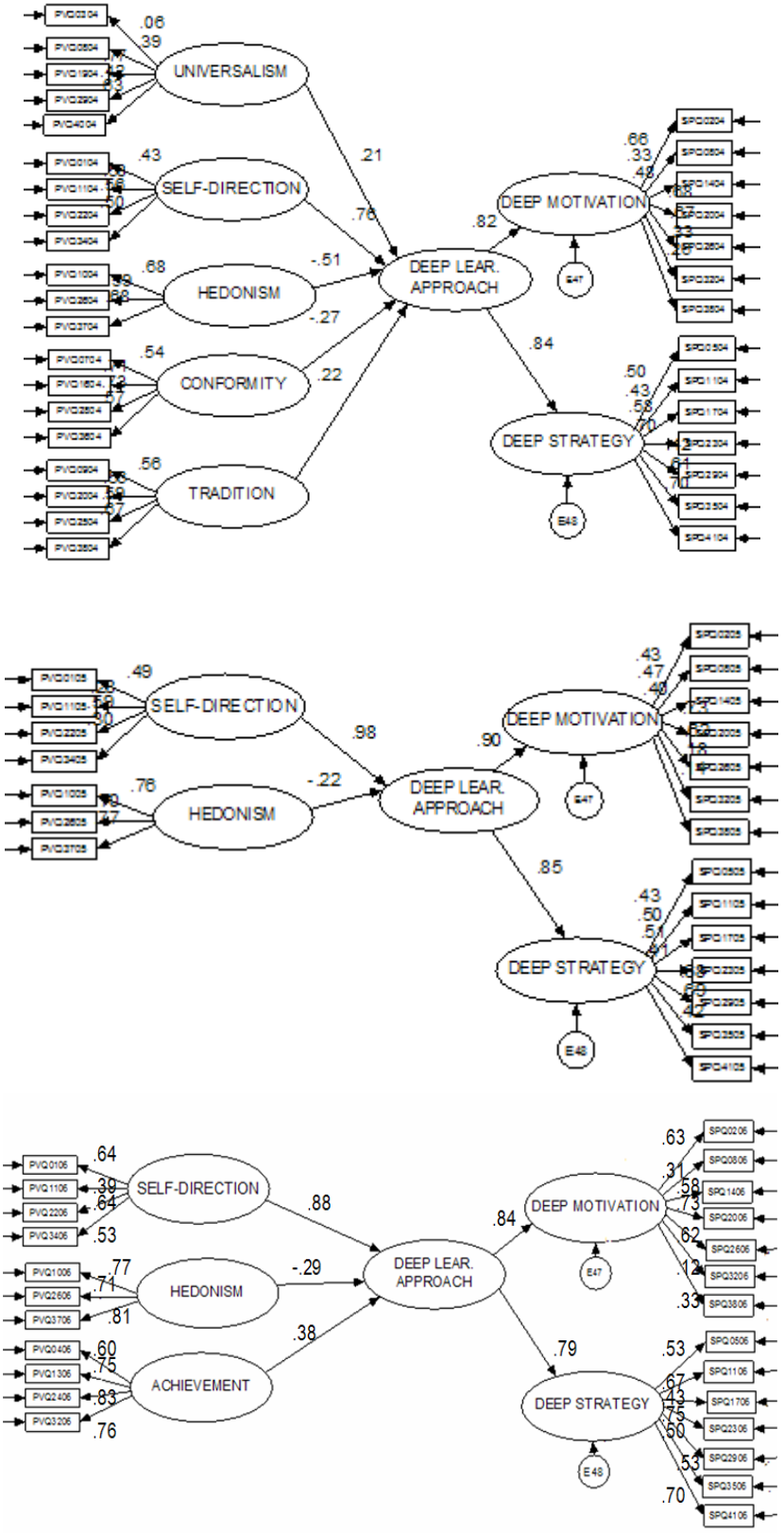

**Figure 4** *Personal values and the surface approach to learning, 2004 (n=116); 2005 (n=115), 2006 (n=106)*

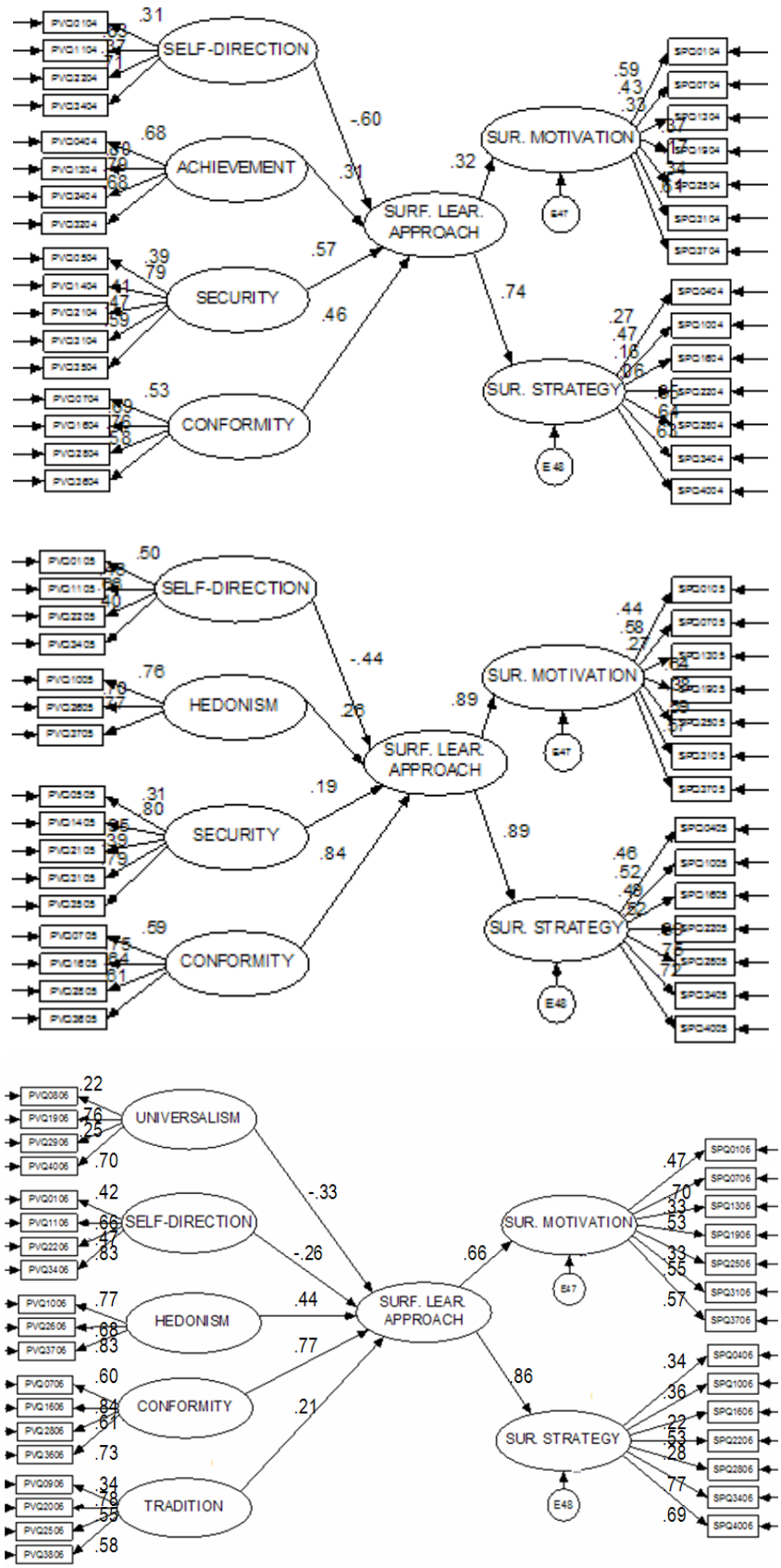

The relationships between personal values and the deep learning approach also differed between the three occasions. While two of the values that were significantly related to the deep approach in 2006, namely self-direction and hedonism, also showed substantive links in 2004 and 2005, additional relationships were observed when students entered university in 2004. Here, universalism, conformity and tradition demonstrated substantive links with the deep approach. Thus, equal treatment, restraint of actions and adherence to customs were important in the context of this approach when the student cohort under review entered university. It should be noted that the negative sign of the effect between conformity and the deep learning approach meant that those students who valued conformity less reported greater intrinsic motivation for their studies and a higher inclination to read widely and to relate new knowledge to previous knowledge. In 2005, only self-direction and hedonism were substantially related to the deep approach to learning. Finally, in 2006 in addition to the two values that were consistent across all years, the desire to achieve (the achievement value) was positively related to the deep learning approach.

As was the case for the other learning approaches, relationships between personal values and the surface approach to learning also showed some similarities and some differences across the three points in time. Thus, self-direction and conformity also influenced the surface approach to learning in 2004 and 2005. Taking into account the signs of the effects this meant that, across all occasions, students who valued independent thought and exploration less and adherence to rules more than other students reported a greater instrumental motivation and inclination to limit studying to the essential requirements of instructors. At the beginning of their studies in 2004, security and achievement were also linked to the surface approach conveying the importance of valuing safety, harmony and stability of society and self as well as the importance attached to achieving for this approach to learning. In 2005, in addition to self-direction, conformity and security, hedonism was positively linked to this learning approach. This meant that students who sought excitement and fun adhered more to this approach and were more inclined to work towards minimum requirements and display instrumental motivation. In 2006, tradition emerged as another value of importance for this approach whereby students who valued the observation of customs to a greater extent displayed more of the characteristics reflecting surface strategies and motivation.

3. *At the end of their studies, how are students' learning approaches affecting academic achievement?*

Figure 5 illustrates the results of the analyses that investigated the effect of the three learning approaches on achievement in the final year of students' undergraduate studies. The more students displayed strategies and motives that were characteristic of the achieving and the deep approaches to learning the lower their GPA was. In other words, the more students followed the achieving and the deep approach, the higher their performance, as lower GPA was indicative of higher performance. The surface approach, in contrast, resulted in a higher GPA, indicating the lower performance of students who identified more with this approach to learning.

**Figure 5** Effects of the achieving, the deep and the surface approach on achievement, 2006 (n=106)

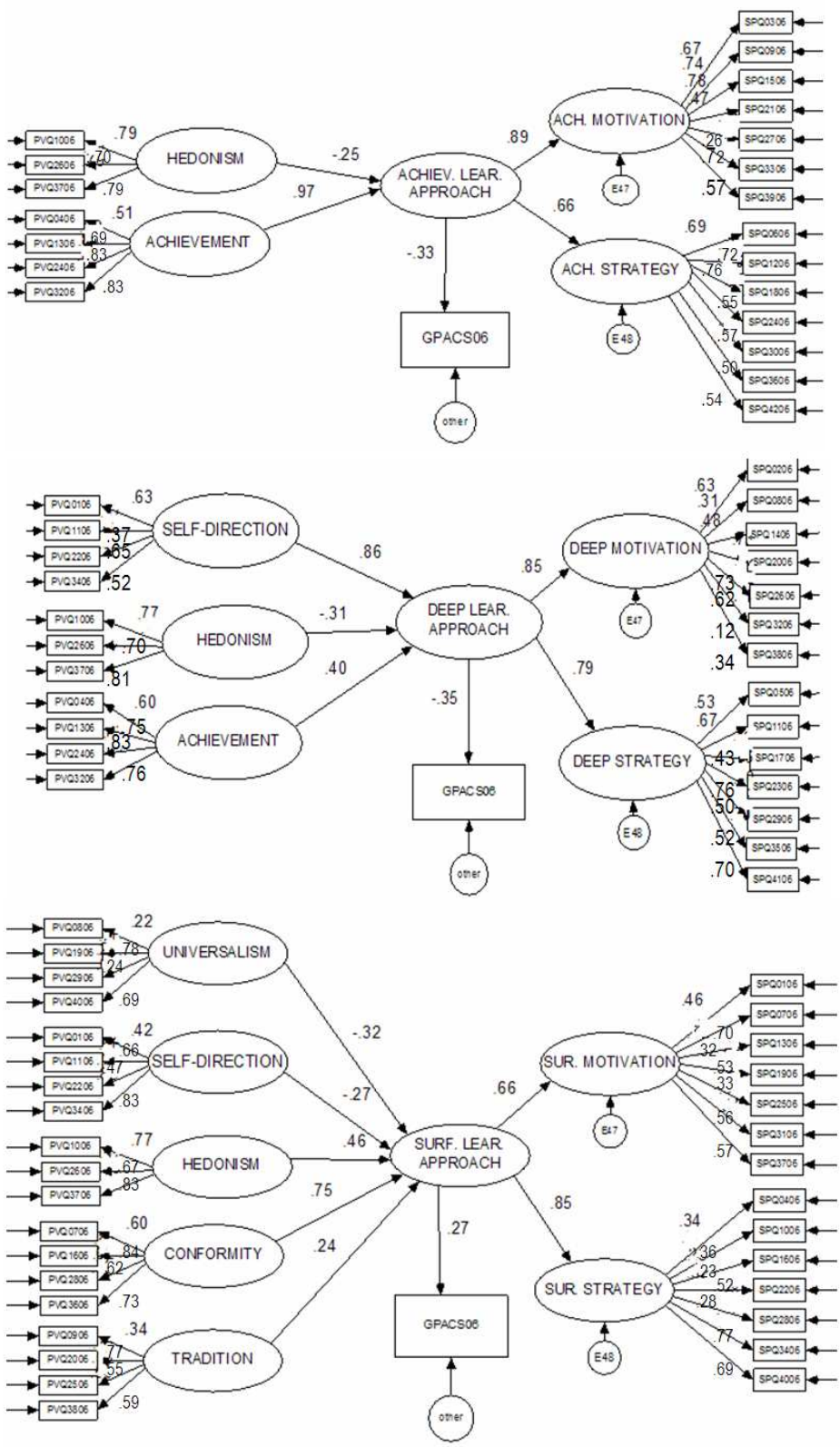


4. *Did any effects of learning approaches on achievement change over time?*

Analyses involving the variables illustrated in Figure 5 were repeated for 2004 and 2005. Results showed that also in the other years, the achieving and the

deep approach led to higher performance whereas the surface approach resulted in lower performance. After the first semester of tertiary studies, in 2004, the effect of the achieving approach and the surface approach on achievement could be observed but were not significant. However, for the deep approach in 2004 and for all approaches in 2005, the learning approaches had a significant effect on achievement.

5. *At the end of their undergraduate studies, do the relationships between values and learning approaches and their effect on achievement remain similar once gender and academic discipline are taken into account?*

The variables "Gender" and "School" were introduced into the models for various purposes. First, the intention was to examine whether the relationships between values and learning approach differed once these variables were included. Second, the specification of direct effects of these variables on each learning approach on the one hand and achievement on the other hand allowed the examination of whether differences in approaches or GPA emerged between male and female students and between students studied the "hard" natural sciences or the "soft" social sciences.

Only two significant effects emerged from the introduction of these variables into the analyses using the 2006 data (see Figure 6 and Figure 7). First, "School" had a significant positive effect on the deep learning approach (Figure 6). Given that students studying in the School of Engineering and Science were given a higher code, this meant that it was students in that school who followed the deeper approach to a greater extent than their peers in the social sciences. No effect of "School" emerged on either the achieving approach or the surface approach.

Second, "Gender" emerged as having a significant negative effect on achievement in the model for the surface approach to learning (Figure 7). Given that girls were coded '1' and boys were coded '0', this meant that female students achieved at a significantly higher level (=lower GPA) than male students when the surface approach to learning was at the centre of the analysis. For the deep and the achieving approach to learning, in contrast, no gender differences emerged in 2006.

**Figure 6** Effect of "School" for the deep learning approach, 2006

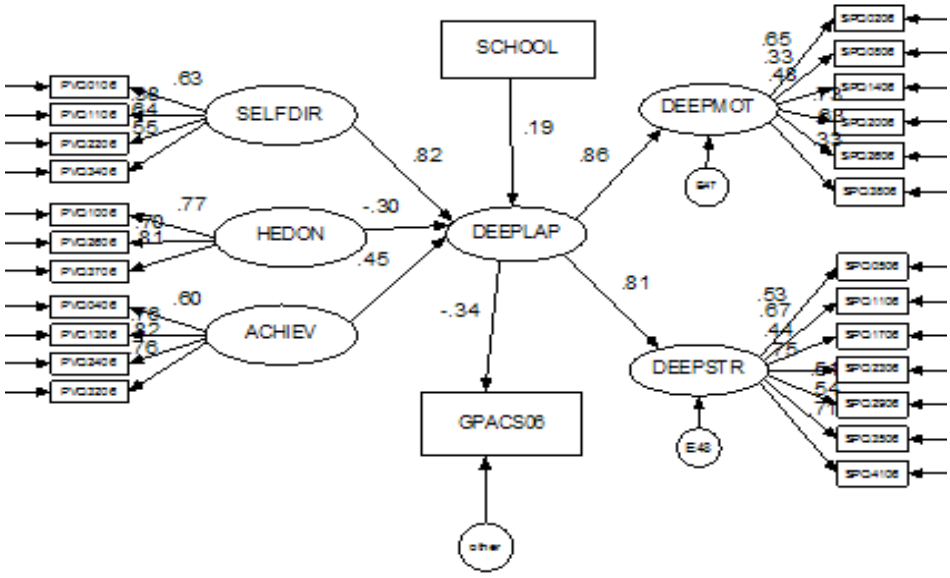

**Figure 7** Effect of "Gender" on achievement for the surface learning approach, 2006

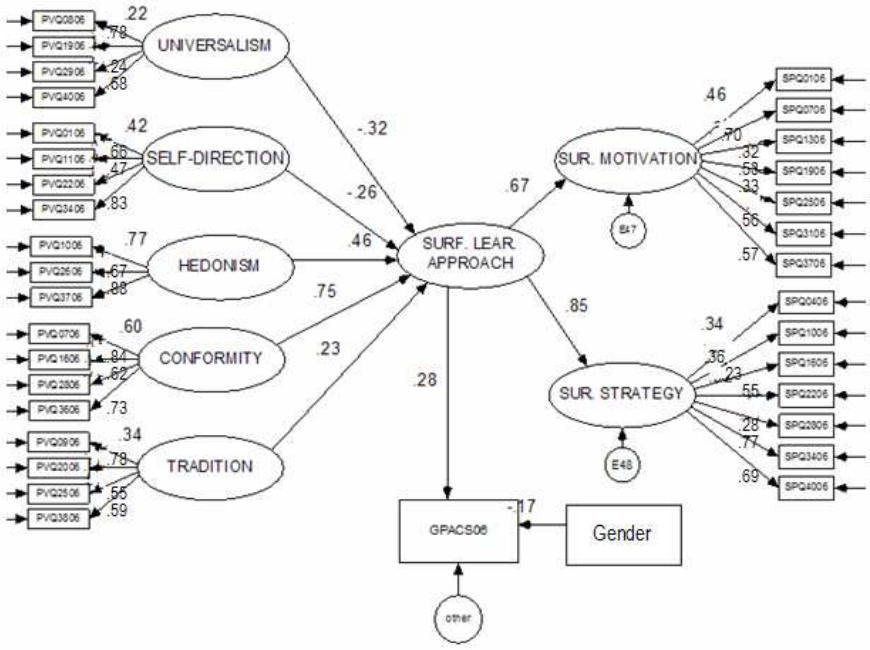


*6. Did the patterns in relationships between values, learning approaches, gender and academic discipline change since the beginning of students' studies?*

Results of the analyses that included gender and school for 2004 and 2005 differed to those found in 2006. Neither gender nor school had a significant effect on any of the learning approaches in those years. Thus, no differences between males and females or between students from the two schools emerged regarding the achieving, the deep or the surface approach in the first and second year of study. Thus, the difference between natural and social science regarding the deep learning approach reported for 2006 was the only noteworthy effect as regards the relationship between discipline or gender and learning approaches.

With respect to the effects of gender and school on GPA, a gender difference had emerged only for the surface learning approach in 2006. In the two preceding years, however, consistent gender effects could be observed, whereby girls outperformed boys for all approaches to learning. However, no significant performance differences between the natural and social sciences could be observed in 2004 and 2005 for any of the three learning approaches.

## Discussion

The analyses reported in this paper provided some interesting results regarding the way in which personal values are linked to different learning approaches, the way learning approaches influenced performance and the way in which these relationships differed depending on gender and academic discipline. Moreover, it provided interesting insights with respect to how these interrelationships changed over the duration over students' undergraduate degrees.

First, it was noteworthy that while some differences emerged as to which specific values were related to which learning approach, consistency emerged as regards a number of these relationships. Thus, for the achieving approach, hedonism and achievement were the personal values that were consistently related over the

three year period. Whereas the achievement value, probably not surprisingly, had a large positive effect on the achieving approach, hedonism, that is the tendency to have fun, was negatively related to this approach across all occasions. Hedonism was also consistently and negatively linked to the deep approach whereas self-direction was a value that had a positive impact on this approach over the three-year period. Self-direction was a personal value that emerged as a constant predictor of the surface approach, albeit in the opposite direction to this effect for the deep approach. For the surface approach, students who attached less value to independent thought and exploration were more likely to report instrumental motivation and strategies that were reproductive in nature and valued rote learning.

These results appear to confirm findings of earlier research into the relationship between personal values and approaches to learning (Matthews 2004, Ng and Renshaw 2002, 2003). In particular, they confirmed that while some adjustment takes place over time, those relationships between values and learning approaches that are stronger tend not to change.

Second, although not significant for two of the nine effects, it was a consistent finding that the achieving approach and the deep approach resulted in higher performance. Adherence to the strategies that characterized the surface motivation and strategies, in contrast, led to lower performance. This is in line with the findings reported previously (Hau and Salili 1996, Watkins 2003, Wilding and Andrews 2006). Moreover, it contributes to a consolidation of what is known about the relationships between different learning approaches and academic performance as these effects emerged at nearly all points in time.

Third, the results reported in this study corroborates much research concerning gender differences in learning (see Picou, Gatlin-Watts and Packer 1998; Rouse and Austin 2002; Cano 2005). Here, the current study identified several instances of gender differences which were found across all learning approaches in 2004 and 2005. On all occasions, female students outperformed male students for all learning approaches. The differences across the learning approaches, however, decreased in 2006 when significant gender differences emerged only with respect to the surface approach to learning.

Finally, contrary much prior research which has reported consistent differences in learning approaches between disciplines (Biggs 1987b, Mokhtari 2003, Smith and Miller 2005, Watkins and Hattie 1981) in this study only one instance of differences between the ‘hard’ and the ‘soft’ sciences was found across all learning approaches and occasions. In the final year of study, students in the natural science showed a significantly higher level of following the deep approach than their peers in the social sciences. That these differences only became significant at the end of the three-year period might stem from the fact that those effects needed time to intensify.

With a view to future research, it would be important to examine how stable the relationships that emerged in this study are over time by conducting an invariance analysis using structural equation modelling in which parameters can be set to be invariant in a single analysis. In this way, a rigorous test can be applied which will indicate the extent to which the relationships between personal values, learning approaches, achievement, gender and academic discipline can be said to be invariant over time.

**References**

Allport, F. H. (1924). *Social psychology.* Boston: Houghton Mifflin.

Andersen, L. W. and Krathwohl, D. R. (Eds.) (2001). *A taxonomy for learning, teaching, and assessing: A revision of Bloom's taxonomy of educational objectives.* New York: Longman.

Biggs, J. B. (1987a). *Student Process Questionnaire Manual*. Australian Council for Educational Research.

Biggs, J. B. (1987b). *Student approaches to learning and studying*. Melbourne: Australian Council for Educational Research.

Biggs, J. B. (1996). Approaches to learning of Asian students, a multiple paradox. In J. Pandey and D. Sinha (Eds.). *Asian contributions to cross-cultural psychology* (pp. 180-199). New Delhi: Sage.

Biggs, J. B. (2001). The revised two-factor study process questionnaire. *Journal of Educational Psychology*, 71:133-149.

Busato, V. V., Prins, F. J., Elshout, J. J. and Hamaker, C. (1998). Learning styles: A cross-sectional and longitudinal study in higher education. *British Journal of Educational Psychology,* 68:427–441.

Cano, F. (2005). Epistemological beliefs and approaches to learning: Their change through secondary school and their influence on academic performance. *British Journal of Educational Psychology*, 75:203-221.

Duckwall, J. M., Arnold, L., & Hayes, J. (1991). Approaches to learning by undergraduate students: A longitudinal study. *Research in Higher Education*, 32(1):1-13.

Entwistle, N. (1998). Approaches to learning and forms of understanding. In B. Dart & G. Boulton-Lewis (Eds). *Teaching and learning in higher education* (pp. 79–85). Melbourne: ACER Press.

Entwistle, N.J., Hanley, M., & Hounsell, D. J. (1979). Identifying distinctive approaches to study. *Higher Education,* 8:365–380.

Entwistle, N. J. and Ramsden, P. (1983). *Understanding student learning.* London: Croom Helm.

Feather, N. T. (1975). *Values in education and society.* New York: The Free Press.

Gibbs, G. (1992). *Improving the quality of student learning*. Bristol: Technical and Educational Services.

Gow, L. and Kember, D. (1990). Does higher education promote independent learning? *Higher Education,* 19:307-322.

Hair, J, Black, W., Babin, B., Anderson, R. and Tatham, R. (2006). *Multivariate data analysis*. New Jersey: Pearson Prentice Hall.

Hu, L. and Bentler, P. M. (1999). Cutoff criteria for covariance structure analysis: Conventional criteria versus new alternatives. *Structural Equation Modeling,* 6(1):1–55.

Jay, T., and Love, B. L. (2002). NCSSSMST longitudinal study of graduates: A three year analysis of college freshman and college seniors. *NCSSSMST Journa*l, 7(2):4-8.

Keeves, J. P. (1975). The home, the school and achievement in mathematics and science. *Science Education,* 59(4):439-460.

Kember, D., Wong, A. and Leung, D. (1999). Reconsidering the dimensions of approaches to learning. *British Journal of Educational Psychology,* 69:323-343.

Kember, D., Biggs, J. and Leung, D. (2004). Examining the multidimensionality of approaches to learning through the development of a revised version of the

Learning Process Questionnaire. *British Journal of Educational Research,* 74:261-280.

Kline, R. (2005). *Principles and practice of Structural Equation Modeling*. New York: The Guilford Press.

Lietz, P. and Matthew, B. (forthcoming). The effects of college students' personal values on changes in leaning approaches. To be published in *Research in Higher Education* in March 2010.

Marsh, H. (1994). Confirmatory factor analysis models of factorial invariance: A multifaceted approach. *Structural Equation Modeling, 1*, 5-34.

Marsh, H. and Hocevar, D. (1985). Application of confirmatory factor analysis to the study of self-concept: First- and higher-order models and their invariance across groups. *Psychological Bulletin, 97*, 562-582.

Marton, F. (1981). Phenomenography: describing conceptions of the world around us. *Instructional Science, 10*(2):177-200.

Marton, F. and Säljö, R. (1976a). On qualitative differences in learning–I, outcome and process. *British Journal of Educational Psychology,* 46:4-11.

Marton, F. and Säljö, R. (1976b). On qualitative differences in learning–II, Outcome as a function of the learner's conception of the task. *British Journal of Educational Psychology,* 46:115-127.

Matthews, B., Lietz, P., and Darmawan, G. (2007). Values and leaning approaches of students at an international university. *Social Psychology of Education*, (10):247-275.

National University of Singapore (NUS) (2004). *NUS students' approaches to learning and studying using a modified study process questionnaire*. Singapore: NUS Centre of the Development of Teaching and Learning. Available at: https://team.nus.edu.sg/cdtl/staff/research/spq2004.pdf. Last accessed 10/12/2008.

Oppenheim, A. N. (1992). *Questionnaire design, interviewing and attitude measurement.* London: Pinter Publishers.

Pintrich P. R. and Zusho, A. (2002). Student motivation and self-regulated learning in college classroom. In J. C. Smart & W. G. Tierney (Eds.), *Higher education: Handbook of theory and research.* Dordrech: Kluwer.

Pintrich, P. R. (2004). A conceptual framework for assessing motivation and selfregulated learning in college students. *Educational Psychology Review,* 16(4):385-407.

Prosser, M., and Trigwell, K. (1999). *Understanding learning and teaching*. Buckingham: SRHE and Open University Press.

Provost, S. C. and Bond, N. W. (1997). Approaches to studying and academic performance in a traditional psychology course. *Higher Education Research and Development,* 16(3):309–320.

Ramsden, P. (1984). The context of learning. In F. Marton, D. Hounsell, & N. Entwistle (Eds.),*The experience of learning*. Edinburgh: Scottish Academic Press.

Rokeach, M. (1973). *The nature of human values.* New York: The Free Press.

Sadler-Smith, E. (1996). Approaches to studying: Age, gender, and academic performance. *Educational Studies,* 22(3):367-379.

Schwartz, S. H. (1992). Universals in the context and structure of values, theoretical advances and empirical tests in 20 countries. In M. Zouma (Ed.), *Advances in experimental social psychology* (Vol. 25) pp. 1-65). Orlando, FL: Academic.

Schwartz, S. H. (1994a). Are there universal aspects in the structure and contents of human values? Human values and social issues, current understanding and implications for the future. *Journal of Social Issues,* 50(5):19-45.

Schwartz, S. H. (1994b).Beyond individualism and collectivism, new cultural dimensions of values. In U. Kim, H. C. Triandis, C. Kagitcibasi, S-C. Choi, & G. Yoon (Eds.), *Individualism and collectivism, theory, method and applications* (pp. 85-119). Thousand Oaks: Sage.

Schwartz, S. H. (1996). Value priorities and behavior: Applying a theory of integrated value systems. In C. Seligman, J. M. Olson & P. Zanna (Eds.), *The psychology of values: The Ontario symposium* (Vol. 8) (pp. 1-24). Mahwah, NJ: Erlbaum.

Schwartz, S., Melech, G., Lehmann, A., Burgess, S., Harris, M., and Owens, V. (2001).Extending the cross-cultural validity of the theory of basic human values with a different method of measurement. *Journal of Cross-cultural Psychology,* 32(5):519-542.

Trigwell, K., & Prosser, M. (1991). Improving the quality of student learning: The influence of the learning context and student approaches to learning on learning outcomes. *Higher Education,* (22):251–266.

Volet, S. E., Renshaw, P. D. and Tietzel, K. (1994). A short term longitudinal investigation of crosscultural differences in study approaches using Biggs' SPQ questionnaire. *British Journal of Educational Psychology,* 64:301–318.

Watkins, D. A. and Hattie, J. (1981). The learning process of Australian university students: Investigations of contextual and personological factors. *British Journal of Educational Psychology*, 51:384-393.

Watkins, D. A. and Hattie, J. (1985). A longitudinal study of the approaches to learning of Australian tertiary students. *Human Learning,* 4:127–141.

Williams, R. M. (1979). Changes and stability in values and values systems, a sociological perspective. In M. Rokeach (Ed.), *Understanding human values* (pp. 15-46). New York: The Free Press.

Zeegers, P. (2001). Approaches to learning in science: A longitudinal study. *British Journal of Educational Psychology,* 71:115-132.

Zeegers, P. (2002). A revision of the Biggs' study process questionnaire (R-SPQ). *Higher Education Research and Development,* 21(1):73-92.