DEO06050

APPROACHES TO LEARNING IN THE SOUTH PACIFIC REGION: A CONFIRMATORY FACTOR ANALYSIS STUDY

Bisun Deo & Huy P. Phan, 2006[1]

[1] **Requests for reprints should be addressed to**:
Bisun Deo, School of Education, Faculty of Arts and Law, The University of the South Pacific (USP), Suva, Fiji Islands (Email: deo_b@usp.ac.fj). Huy P. Phan, School of Education, Faculty of Arts and Law, The University of the South Pacific, Suva, Fiji Islands (E-mail: phan_h@usp.ac.fj).

Acknowledgements:
We express our sincere appreciation to Professor T. Velayutham for providing us with critical feedback and valuable suggestions. We also express our gratitude to Mr. Jagdish Prasad who has aided us in so many ways. Thank you to the students enrolled in educational psychology for their contributions.
Finally, our thanks to the two anonymous reviewers for their comments and helpful suggestions.
The research reported in this article was supported by grants from the USP Research Committee.

APPROACHES TO LEARNING IN THE SOUTH PACIFIC REGION: A CONFIRMATORY FACTOR ANALYSIS STUDY

Bisun Deo & Huy P. Phan, 2006

Abstract. There has been substantial research evidence over the past three decades concerning the learning styles of students in both Western and non-Western contexts. In particular, it has been a decade since research in the South Pacific was conducted on the learning styles of tertiary students. The focus of the present research study was therefore to extend previous research studies, concerning the orientation of learning styles of Fijian and other Pacific Islands students enrolling in Educational Psychology at the University of the South Pacific. Biggs' (1987) SPQ was revised to suit the Pacific social and cultural contexts before administering to 159 (87 females, 72 males) undergraduate students. Different confirmatory factor analysis (*CFA*) models were tested to investigate the possible multidimensionality of approaches to learning (SAL). Results clearly did not support the theoretical framework of a three-factor model (Biggs, 1987) and instead indicated the existence of a two first-factor model, emphasizing two major types of learning orientation – *Reproducing* and *Meaning* (Richardson, 1994). Our finding has important implications in the South Pacific region suggesting that educators should ensure that assessment and other teaching learning elements in the university system are constructively aligned to promoting the appropriate style of learning.

Learning Orientation: Theoretical perspective and research evidence

The theoretical tenets to learning which derive from the pioneering work of Marton and Saljo (1976) emphasize two categories of approaches to learning - *deep-level* and *surface-level* processing. In their research, the authors asked students to read a text and interviewed them about what they had learnt from the reading and how they had approached the task. Findings indicated students who engaged in deep-level learning were more intrinsically motivated and were curious to seek and make meaning from their learning. Students adopting this orientation were committed to learning where they related subject material to meaningful contexts and prior knowledge. In comparison, according to Marton and Saljo (1976), students who adopted a surface approach based their learning on extrinsic motivation of positive and negative reinforcement. Students adopting this approach were more concerned with passing the examination with minimal effort.

The results of the Marton and Saljo (1976) study indicate the two study approaches encompass different motives and strategies for accomplishing specific tasks. Over the past three decades, much work on studying and learning approaches has been carried out using Learning Styles inventories such as Biggs' (1987) Study Process Questionnaire (SPQ) for tertiary students and Learning Process Questionnaire (LPQ) for high school students. The theory from which these learning styles inventories are derived conceptualizes student learning as a combination of both motives and strategies. Implicit to this theory then, is that motives and strategies are subject to change and that students may adopt any of these approaches which they see as being appropriate. According to Biggs' (1987) learning styles inventories, the SPQ and LPQ both contain items relating to surface and deep factors: surface strategy and surface motive, and deep strategy and deep motive. These surface and deep factors emphasize two main orientations to

approaching studying (Richardson, 1994); one where effort is directed towards understanding the material studied, whilst the other is normally regarded as a less desirable orientation aimed to reproduce learnt material for assessment purposes.

In addition to the two mutually exclusive learning approaches, Biggs (1987) also identified an *achieving* approach that focuses on attaining motivation to compete and gain high grades. In adopting this achieving approach, the strategies used by the students are context oriented, focusing on the opportunities for obtaining high marks, and involving systematic organization and cost-effective use of time and effort. Biggs (1987) also indicates that the achieving approach can be associated with either the surface or the deep approach. For example, a student can either learn systematically by rote in order to get high grades, or to get meaning of a content, thus constituting a 'surface-achieving' or 'deep-achieving' approach, respectively.

With reference to the theoretical conception of study approaches (Biggs, 1987; Marton & Saljo, 1976) at USP, Richardson and colleagues (Richardson, Landbeck & Mugler, 1995) have done some work, using the 18-item Approaches to Studying Inventory (ASI). The study involved students registered in fulltime undergraduate Linguistics courses, LL122 and LL311. Their findings suggest that approaches to study amongst the sample under investigation were largely driven by motivational considerations (achievement motivation, intrinsic motivation, and passivity or a general lack of motivation). However, there was a marked absence of cognitive strategies (in complete contrast to Newstead's (1992) and Richardson's (1992) findings using the ASI in United Kingdom) and approaches guiding these various types of motivation that could be considered in bringing about effective learning. Interestingly, however, these motivational orientations were not aligned to effective cognitive strategies as one would expect, and as has been noted amongst learners in Western contexts, of students having deep, surface or achieving

approaches to learning. This research has, similar to some of the findings of Kember and Gow (1990, 1991), Watkins and Regmi (1992), established that there are variations in approaches to learning between Western and non-Western students. The above evidence of learning orientations and academic performance show: a) academic performance positively correlated with scores on deep approach, intrinsic motivation and achieving approach; b) academic performance negatively correlated with scores on surface approach, disorganized study methods and negative attitudes to studying; and c) academic performance correlated positively with achieving orientation for LL311. The authors agree that researchers need to be more cautious when using the current version of ASI as this was largely developed for the Western context and audience. Such assertions support the view that approaches to studying are context and culture specific and that inventories like the ASI need to be modified to suit different local and regional contexts.

Landbeck and Mugler (1997) have also explored the conceptions of learning held by students at the University of the South Pacific using a phenomenographic approach. The conception of learning framework consisted of the following hierarchically organized categories in which learning was generally characterized as: a) an increase in knowledge, b) memorizing and reproducing, c) the ability to apply knowledge, d) understanding and e) seeing something in a different way, and f) seeing learning as changing a person. These authors found that the most common conception amongst the sample investigated was the conception of seeing learning as applying or making use of knowledge. Overall the USP students displayed a lower percentage of higher-order conceptions of learning. The possible reasons for this could be the highly examination driven curricula of senior secondary schools in the member countries of the South

Pacific, as well as the lecture-based transmission mode of teaching preferred by students (e.g., Deo & Nabobo, 2003).

Other research studies investigating learning approaches using different learning inventories (e.g., LPQ and SPQ), by means of confirmatory factor analysis (*CFA*), indicates distinct latent factors that correspond closely to the learning approaches identified (Biggs, 1987; Marton & Saljo, 1976). This evidence is consistent across different sample groups and in different social/cultural contexts: British psychology students (Wilson, Smart, & Watson, 1996), Chinese health-care students (Jones & Jones, 1996), Australian nursing students (Murray-Harvey, 1994), and tertiary students in Hong Kong (e.g., Biggs, Kember, & Leung, 2001; Kember & Leung, 1998; Kember, Wong, & Leung, 1999). For example, Kember and Leung (1998) found from *CFA* with tertiary students in Hong Kong that the SPQ is best described by a two-factor model which the authors termed as *meaning* and *reproducing* approaches. These two approaches, according to them, correspond closely to the two main approaches of learning postulated earlier by Marton and Saljo (1976). Furthermore, they also indicated that there was a suggestion of a third dimension referred to as achieving approach that shared components of both the meaning and reproducing orientations of learning.

Biggs (1987) and Marton and Saljo (1976) found that teaching and assessment practices encouraged students to adopt a surface approach to learning. This was more apparent when teaching and assessment approaches did not align closely to the aims and objectives of teaching in the particular subject area. The orientation and adoption of a surface approach indicated that there were limitations in teaching and/or assessment methods, but this is something that we may also address and investigate further. Evidence of students' responses of learning inventories such

as the SPQ and the LPQ is important in providing useful information for educators concerning the teaching approaches (Biggs, 1993) as well as assessment tasks (Tang, 1991).

There is also some anecdotal evidence of a pressing concern that tertiary students of the South Pacific region, predominantly those of Indo-Fijian background, are increasingly pressured by their parents and community to excel academically. This intense pressure instills a mindset in a majority of the Indo-Fijian students enrolled in the regional university to engage in more surface-based learning and less deep-based learning orientation. This kind of learning utilizes what may be regarded as "short cuts" to learning that involves memorisation and rote learning with elements of guesswork. Some of these are already learnt at the school level and are carried over to tertiary level learning. For these students, effective learning entails the notion of being able to pass quizzes, short tests and external examinations with good grades and these good grades then enable students to proceed onto and graduate from the university. This "institutionalised" cycle is then perpetuated at the university where students orient towards a particular learning style so as to achieve the status quo. It is important then, we believe, that more emphasis is placed on investigating the orientation of South Pacific students relating to their learning approaches. Such evidence arising from the present study would contribute to the existing literature, as well as providing useful information and a clearer picture of the different approaches of learning style that Pacific students orientate towards. Furthermore, we anticipate the findings in this study would help educators in ensuring that their assessments and the teaching and learning processes are constructively aligned to deep approaches to learning.

The USP Context

Established in 1968 in Suva, capital of the Republic of the Fiji Islands, the University of the South Pacific (USP) is a truly regional institution of higher learning providing high quality tertiary education to the Pacific region. The USP is owned and operated by twelve member countries, largely classified as small island states, of the South Pacific: Cook Islands, Fiji, Kiribati, Marshall Islands, Nauru, Niue, Samoa, Solomon Islands, Tokelau, Tonga, Tuvalu and Vanuatu.

The USP, currently the leading provider of tertiary education in the South Pacific region, started as a small dual mode institution in 1968, however, over the three and half decades has become multimodal in nature offering courses through face-to-face, mixed mode and distance and flexible learning (DFL). The multimodal nature of the USP is providing greater opportunities for better and integrated delivery of courses to both on-campus and distance students. USP's programs and courses are delivered through its three campuses – Laucala, Fiji; Alafua, Samoa; Emalus, Vanuatu; and University Centers located in each of the twelve member countries (See Figure 1). USP's multiracial, multilingual and multicultural clientele largely come from the member countries spread over 33 million kilometers of ocean. In order to serve a region so diverse and economically poor and disadvantaged, distance and flexible teaching learning is gradually becoming a mainstreamed part of the Faculty's work.

INSERT FIGURE 1 HERE

The Case of ED/PS252: Educational Psychology and the Teaching Learning Process

ED/PS252 is a second year degree course offered by the School of Education in the Faculty of Arts and Law. The course is coded as ED/PS as it is taken by both students majoring

in Education and/or Psychology and it is a compulsory course for in-service and pre-service teacher education programs - Bachelor of Arts degree with Psychology major as well as for most of the Certificate and Diploma programs offered by the School of Education. This course is taught through on-campus, distance and flexible and flexi school modes. Enrolments average around 200 on-campus and over 350 through the distance and flexible mode. ED/PS252, irrespective of the mode of delivery, has largely taken a 'team teaching' approach; the advantage being that the teaching styles and perspectives of at least three staff members are brought to the course.

Students are required to attend a compulsory one-hour lecture and a two-hour workshop per week over a fourteen week semester. The prescribed texts are the DFL course books plus other recommended texts kept on reserve in the USP Library. The course covers seven key teaching learning areas and the weekly lectures and workshops revolve around these: examining beliefs about teaching and learning, behaviorist and social learning theories, constructivism, cognitive learning theories, learning for understanding, motivation, co-operative learning, and teacher as a problem solver.

During the weekly lectures, students are introduced to the main ideas, constructs, issues and current research and thinking, pertaining to the selected weekly theme. The workshops provide students with opportunities for more personalized discussion and interaction with tutors and peers on matters raised in the lectures and course texts. On average, each workshop has 25 students and they are further divided into 'small work groups' of four or five for peer group activities and seminar presentations. Workshop tutors take into consideration gender and ethnic mix when forming the small work group with the aim of bringing various experiences and contexts to the course.

The assessment for ED/PS252 includes 50% coursework and 50% final examination. Of the 50% coursework, 10% is allocated to workshop activities which include six written up group reports based on set questions relating to the week's themes and readings and a group seminar. The remaining balance of the coursework is made up of 20% individual school-based research project and a 20% mid-semester test.

The Present Study

Based on evidence of existing studies (e.g., Kember & Leung, 1998; Kember *et al.*, 1999; Marton & Saljo, 1976), the present research then attempts to investigate tertiary students' general study approaches in a second-year course at the regional university, the University of the South Pacific, using an adapted version of Biggs' (1987) SPQ. The SPQ contains 42 self-report items operationalising the main approaches namely, surface, deep, and achieving, with their respective motives and strategies components with reference to students' general orientation to learning. Students' responses of the SPQ are then tested by means of *CFA* with different first and second-order factor models evaluated. In all, based on previous research evidence (e.g., Kember & Leung, 1998; Kember *et al.*, 1999) we postulated seven *a priori CFA* models in our study to correspond to the major study approaches (See Figure 2):

***INSERT FIGURE 2 HERE* (*Seven a priori structural models of the SPQ*)**

Model 1A: Two-factor model

This is a two-factor model based on Richardson's (1994) suggestion. This model has two latent factors: 'meaning' (ME) and 'reproducing' (RP). The meaning factor has an orientation towards comprehending the meaning of the materials to be learnt, while the reproducing factor describes an orientation towards being able to reproduce materials for

the purpose of academic assessment. The reproduction factor has the surface strategy and surface motive subscales as indicators, and the meaning factor has the remaining four subscales namely, Deep Motive (DM), Deep Strategy (DS), Achieving Motive (AM), Achieving Strategy (AS) as indicators.

Model 1B: Two-factor model with shared indicators

This model is a refinement of Model 1A in that the reproduction factor also has AS and AM as indicators.

Model 2A: Three-factor model

This model has three latent factors: Deep approach (DA), Surface approach (SA), and Achieving approach (AA). Each of the three factors has two measured indicators representing the strategy and motive subscales.

Model 2B: Three-factor model with correlation between (b/w) (DA) and (AA)

This is an extension of model 2A with a covariance included between the deep and achieving approaches. The inclusion of the covariance suggests that deep approach is commonly found in conjunction with the achieving approach (Biggs, 1987).

Model 2C: Three-factor model with correlation b/w (DA) and (AA), and (SA) and (AA)

This model is an extension of models 2A and 2B with another covariance included between the surface and achieving approaches.

Model 3A: Higher-order factor model with factors b/w (DA) and (AA)

This model is based on Biggs' (1987) depiction of a composite higher-order deep-achieving factor (D-A).

Model 3B: Higher-order factor model with factors b/w (DA) and (AA), and (SA) and (AA)

This model is an extension of model 3A with another higher-order factor included for surface-achieving (S-A).

Furthermore, differences in gender and ethnicity of learning approaches are explored in this study. Previous studies have shown that there is a relationship between gender and learning styles. For example, Smith and Miller (2005) found female university students to score higher than male students on achieving strategy. Likewise, Cano (2005) found that boys and girls become more differentiated in their approaches to learning as they proceed from junior to high school. Furthermore, the learning motives and strategies have also been examined in the context of cross-cultural comparisons. Cross-cultural studies using mainly the SPQ have indicated that students' styles of learning are situated socially and culturally (e.g., Kember & Leung, 1998; Wong, Lin, & Watkins, 1996; Zhang, 2000). The work of Biggs, Kember, Watkins and colleagues, in particular, suggests the distinct demarcation of learning approaches between Western and non-Western students. Importantly, the contention argued by researchers in this area employing different methodologies concerns whether Western concepts of approaches to learning are relevant in other social and cultural settings.

Research Methods

Procedure and Sample

The present cross-sectional study involved administration of Biggs' (1987) SPQ to second-year students enrolled at the regional university, USP. This questionnaire was administered by the authors with the assistance of a tutor in a lecture theatre during the first 25 minutes of a lecture in educational psychology. The participants were briefed at the outset

concerning the purpose of the research, and that participation was voluntary. In total, 159 of 187 ED/PS 252 students participated in the study, 87 being females and 72 males.

Instrument

The SPQ was chosen in this study as it demonstrated from previous research evidence to have good reliability and construct validity (e.g., Kember & Leung, 1998). As mentioned earlier, Biggs' (1987) SPQ contains 42 self-report items operationalising the three study approaches, Deep, Surface, and Achieving, with their respective motives and strategies components with respect to the students' general orientation to learning. Given that English is a second, third or even fourth language for the majority of the students enrolling at USP, and that the cultural context differs with that of the West, the SPQ was adapted to cater for use with the USP student population. Responses were expected on a seven-point Likert scale from "I strongly disagree or disagree with this item" (1) to "I agree or strongly agree with this item" (7). Sample items from the modified SPQ included, for example, "I want top grades in most or all of my courses so that I will be able to select from among the best offers available when I graduate from USP (AM); "I chose my present course largely with a view to the job situation when I graduate rather than out of its personal (intrinsic) interest to me" (SM).

Data Analysis

SPSS statistical program was used to determine the reliability of the scales as well as to provide results in descriptive forms. Confirmatory factor analysis (*CFA*) was used in the present study to examine the learning style orientations of ED/PS 252 students. Given that no existing *CFA* evidence is available for the South Pacific context, we decided to perform an exploratory analysis first to see the possible 'factor' trends that might exist for the data. Furthermore, such findings we believe would also help support our *CFA* findings of the different *a priori* models

tested. *CFA*, in contrast to other simpler methodologies, is advantageous in its ability to test *a priori* models about latent variables and calculating all of the parameters in the model simultaneously with the overall model fit provided (Bollen, 1989; Farrell, 1994; Kline, 1998; Pedhazur, 1997; Rogosa, 1979). The analyses of the seven *a priori* models hypothesized were conducted using the statistical LISREL (Joreskog & Sorbom, 2000) mainframe computer program. Various goodness-of-fit indexes (e.g., *CFI*, *NNFI*) were used as indicators representative of a well-fitted model. LISREL in this case involved testing the fit between a sample covariance matrix and a matrix reproduced when parameters are constrained to match a theoretical model. Covariance matrices were computed from input raw data and subsequently analysed. The Maximum Likelihood (ML) method was chosen as the estimation procedure as it is shown to perform reasonably well with multivariate normally distributed data (e.g., Chou & Bentler, 1995).

Results

The mean and standard deviations of the six subscales are presented in Table 1. We obtained a coefficient α score of .85 for the overall instrument, and the alpha values ranged from .45 to .79 for the subscales. The alpha values are similar to those obtained in previous studies (e.g., Leung & Kember, 2003). Some researchers have adopted an arbitrary cutoff point for alpha value of .70; however, others (e.g., Schmitt, 1996) have argued that alpha values as low as .50 would not weaken validity coefficients.

***INSERT TABLE 1* (*Mean, standard deviation*)**

***INSERT TABLE 2 HERE* (*Fit Indexes of First and Second-order Factor Models*)**

The goodness-of-fit indexes for the seven *CFA* models tested are presented in Table 2. The various goodness-of-fit indexes (e.g., *CFI*, *NNFI*) indicated the two-factor, shared indicators model (Model 1B) as providing the best model fit whereas, in comparison, the original three-factor model (Model 2A) provided the worst fit. Similar to the Kember and Leung (1998) study, our results showed the correlated three-factor model (Model 2C) and the higher-order factor model (Model 3B) as having good model fits. However, a comparison of the goodness-of-fit indexes indicated overall that the best fit for the SPQ data was Model 1B (e.g., *CFI* = 0.97, *NNFI* = 0.93). Accordingly, Figure 3 presents the standardized solutions for Model 1B with all paths statistically significant at the 0.05 level.

***INSERT FIGURE 3 HERE* (*Complete standardized solutions*)**

Based on the mean scores presented in Tables 1, data were analysed using multivariate analysis of variance (*MANOVA*) to explore potential statistical significant differences. The dependent variables in this case were deep motive and strategy, surface motive and strategy, and achieving motive and strategy. The independent variables were gender, ethnicity, and gender × ethnicity. This analysis failed to reveal a significant multivariate effect for gender, Wilks's lambda = .97, $F(4, 145) = 1.06$, $p = .38$, ethnicity, Wilks's lambda = .84, $F(24, 507) = 1.06$, $p = .39$, or for the interaction of gender and ethnicity, Wilks's lambda = .94, $F(12, 384) = .78$, $p = .67$. When the results for the dependent variables were considered separately (*ANOVA*), using a Bonferroni adjusted alpha level of .008, no difference reached statistical significance.

Discussion of Findings

The purpose of the present study was to shed further light on the learning orientation of tertiary students in the South Pacific region. It has been a decade since the last research

(Landbeck & Mugler, 1997; Richardson *et al.*, 1995) was conducted on the study approaches of students in the South Pacific region, at USP. In particular, the important focus of our study was to apply Biggs' (1987) SPQ to a culturally diverse group of students, and to compare the findings with those obtained from students of Western cultural backgrounds. We also extended previous quantitative studies (e.g., Kember & Leung, 1998; Kember *et al.*, 1999; Leung & Kember, 2003) by testing out different a priori models that might explain USP students' study approaches. In this analysis, seven different structural models corresponding to Biggs' (1987) theoretical conception of the three major types of learning were tested.

The results of our study provide support for Richardson's (1994) model where there were two main orientations to approaching study: meaning and reproducing. The *CFA* results in Table 2 show that educational psychology (ED/PS252) students at USP orientate their study to two main approaches. On the one hand, students are directing their effort to understanding the materials studied, and on the other hand it is about reproducing materials for academic assessment purposes. This finding regarding reproducing materials for academic highlight supports our previous assertion that students in this region, especially those from Indo-Fijian background, are often under family and parental pressure to excel academically. Because of this intense pressure, the students then resort to orientate their study approach (i.e., reproducing) for the purpose of assessments, etc.

Our results are consistent with existing research (e.g., Kember & Leung, 1998; Wong *et al*., 1996) in showing the discrete three-factor model (surface, deep, and achieving) as having a very poor fit to the data. Kember and Leung (1998) as well as Wong *et al*. (1996) also found in their studies that the three-factor model had the worst fit for their data. This finding seems to support the earlier contention put forward by Richardson (1994) which argued that the

achieving/strategic dimension could not be classified as a third category of the learning approach construct. In fact, based on the similar findings amongst the present study and previous studies, it seems to indicate that achieving/strategic dimension is an additional dimension that may be present in both meaning and reproducing orientations.

Our results are important on two counts: Firstly, it establishes the basis for the use of Biggs' (1987) SPQ as an alternative form of measure of study approaches amongst South Pacific tertiary students. Importantly, also, we believe that our research lends credence for the use of a different methodological approach, in this case a quantitative one by means of *CFA*. Furthermore our result also validates the importance of the SPQ (Biggs, 1987) as a valid measure that may be used cross-culturally to investigate the study approaches of students. At present, we are also extending this line of inquiry to secondary school students ($N = 2700$) using Biggs' (1987) LPQ, adapted in part to suit the socio-cultural context. Secondly, similar to previous research inquiry in this region (Landbeck & Mugler, 1997; Richardson *et al.*, 1995), our study is significant in providing extended and corroborative evidence of how tertiary students at USP approach their learning. This study approach of USP students is important in helping educators and teachers contextualize the teaching learning processes. This is in line with existing research studies (e.g., Leung & Kember, 2003) which draw parallels between the theoretical framework of study approaches (Biggs, 1987, 1993) and the implementation of different teaching strategies that enhance the teaching learning process.

As for our prediction concerning differences in gender and ethnicity and the approaches to learning, the findings do not support previous research studies. This evidence comes as a surprise given that previous studies have indicated statistically significant differences in gender (Cano, 2005; Smith & Miller, 2005) and ethnicity (Wong *et al*., 1996; Zhang, 2000) in the major

learning approaches. One possible explanation for this unexpected finding is that the majority of the students in this sample were from the Republic of Fiji, where the school education system, similar to the wider Pacific, is very much exam-orientated and driven. This exam-orientation instills a specific mindset of learning to *all* students that reproducing grades and memorisation is more rewarding. It is therefore not surprising that students, disregard of gender or ethnicity, carry this preferred pattern of learning to university. This pattern of memorisation and rote learning carries from first year into second year, etc. Further research is therefore needed to explore the relationship between gender, ethnicity and learning styles using a bigger sample.

In conclusion, the results of our study support the existing theoretical conception of study approaches (Marton & Saljo, 1976; Richardson, 1994), as well as supporting our previous rationale that the process of reproducing materials for academic assessments is ongoing at the USP. Evidence arising from this study, however, did not support the three main approaches – deep, surface, and achieving – but instead confirmed Richardson's (1994) two major types of learning, that is, *reproducing* and *meaning*. To a large extent, this ongoing cycle shapes and is shaped by the school curriculum and the teaching learning processes. Given the importance of our *within-construct* validity findings obtained from *CFA*, it is recommended that future research studies explore the issue of *between-construct* validity by testing the SPQ with other criterion-based outcomes, such as academic achievement and locus of control. Furthermore research should be undertaken to explore the relationships between learning styles and specific subject disciplines as there is emerging research evidence to support the existence of such relationships (e.g., Skogsberg & Clump, 2003; Smith & Miller, 2005; Zeegers, 2001).

References:

Biggs, J. (1987). Student approaches to learning and studying. Melbourne: Australian Council for Educational Research.

Biggs, J. (1993). From theory to practice: A cognitive systems approach. *Higher Educational Research and Development*, *12*, 73-86.

Biggs, J., Kember, D. & Leung, D. Y. P. (2001). The revised two-factor Study Process Questionnaire: R – SPQ – 2F. *British Journal of Educational Psychology*, *71*, 133-149.

Bollen, K. A. (1989). Structural equations with latent variables. New York City: Wiley.

Byrne, B. M. (1998). Structural equation modeling with LISREL, PRELIS, and SIMPLIS: Basic concepts, applications, and programming. Mahwah, NJ: Erlbaum.

Cano, F. (2005). Epistemological beliefs and approaches to learning: their change through secondary schooling and their influence on academic performance. *British Journal of Educational Psychology*, 75, 203-221.

Chou, C. P. & Bentler, P. M. (1995). Estimates and tests in structural equation modeling. In R. H. Hoyle (Ed.), *Structural equation modeling: Concepts, issues, and applications* (pp. 37-55). Thousand Oaks, CA: Sage.

Deo, B. & Nabobo, U. (2003). Reflections on mixed mode and multimode teaching: USP Case Study. Paper Presented at 16th Biennial ODLAA Forum, Canberra, Australia, 1- 4 October 2003.

Farrell, A. D. (1994). Structural Equation Modeling With Longitudinal Data: Strategies for Examining Group Differences and Reciprocal Relationships. *Journal of Consulting and Clinical Psychology*, *62*, 3, 477-487.

Jones, A. & Jones, D. (1996). Student orientation to independent learning. *Higher Education Research and Development*, 15(*2*), 83-96.

Joreskog, K. G. & Sorbom, D. (2000). LISREL 8.30 (Student edition, February 2000). Chicago: Scientific Software International, Inc.

Kember, D & Gow. L (1990). Cultural specificity of approaches to study. *British Journal of Educational Psychology*, *60*, 356-363.

Kember, D & Gow, L. (1991) A challenge to the anecdotal stereotype of the Asian student. *Studies in Higher Education*, *16*,117-128.

Kember, D. & Leung, D. Y. P. (1998). The dimensionality of approaches to learning: an investigation with confirmatory factor analysis on the structure of the SPQ and LPQ. *British Journal of Educational Psychology*, *68*, 395-407.

Kember, D., Wong, A. & Leung, D. Y. P. (1999). Reconsidering the dimensions of approaches to learning. *British Journal of Educational Psychology*, *69*, 323-343.

Kline, R. B. (1998). Principles and Practice of Structural Equation Modeling. The Guilford Press. New York.

Leung, D. Y. P. & Kember, D. (2003). The relationship between approaches to learning and reflection upon practice. *Educational Psychology*, 23 (1), 61-71.

Marton, F. & Saljo, R. (1976). On qualitative differences in learning – I: Outcome and process. *British Journal of Educational Psychology*, 46, 4-11.

Mezirow, J. (1998). On critical reflection. *Adult Education Quarterly*, *48*, 185-198.

Mugler, F. & Landbeck, R. (1997). Learning in the South Pacific and Phenomenography across Cultures. *Higher Education Research and Development*, *16* (2), June, 227-239.

Murray-Harvey, R. (1994). Learning styles and approaches to learning: distinguishing between concepts and instruments. *British Journal of Educational Psychology*, 64, 373-388.

Newstead, S.E (1992). A study of two 'quick-and-easy' methods of assessing individual differences in student learning. *British Journal of educational Psychology*, *62*, 299-312

Pedhazur, E. J. (1997). Multiple Regression in Behavioral Research (3rd Ed). Fort Worth: Hartcourt Brace College Publishers.

Richardson, J.T.E (1992). A critical evaluation of a short form of Approaches to Studying Inventory. *Psychology Teaching Review*, 1, 449-468.

Richardson, J. T. E. (1994). Cultural specificity of approaches to studying in higher education. *Higher Education*, 27, 449-468.

Richardson, J.T.E., Landbeck, R. & Mugler, F. (1995). Approaches to Studying in Higher Education: a comparative study in the South Pacific. *Educational Psychology*, *15*(4), 417-432.

Rogosa, D. (1979). Causal Models in Longitudinal Research: Rationale, Formulation, and Interpretation. In J. R. Nesselroade & P. B. Balles (Eds.), Longitudinal Research in the Study of Behavior and Development. New York: Academic Press.

Schmitt, N. (1996). Uses and abuses of coefficient alpha. *Psychological Assessment*, *8*, 350-353.

Skogsberg, K. & Clump, M. (2003). Do psychology and biology majors differ in their study processes and learning styles? *College of Student Journal*, *37*(1), 27-33.

Smith, N. & Miller, R. J. (2005). Learning approaches: examination type, discipline of study, and gender. *Educational Psychology*, *25*(1), 43-53.

Tang, C. (1991). Effects of different assessment methods on tertiary students' approaches to studying. Unpublished doctoral dissertation, University of Hong Kong.

Watkins, D. & Regmi, M. (1990). An investigation of the approach to learning of Nepalese tertiary students. *Higher Education*, *20*, 459-469.

Wilson, K. L., Smart, R. M. & Watson, R. J. (1996). Gender difference in approach to learning in first year psychology. *British Journal of Educational Psychology*, *66*, 59-71.

Wong, N. Y., Lin, W. Y., & Watkins, D. (1996). Cross-cultural validation of models of approaches to learning: an application of confirmatory factor analysis. *Educational Psychology*, *16*, 317-327.

Zeegers, P. (2001). Approaches to learning in science – A longitudinal study. *British Journal of Educational Psychology*, *71*, 115-32.

Zhang, L.-F. (2000). University students' learning approaches in three cultures: An investigation of Biggs's 3P Model. *The Journal of Psychology*, *134*(1), 37-55.

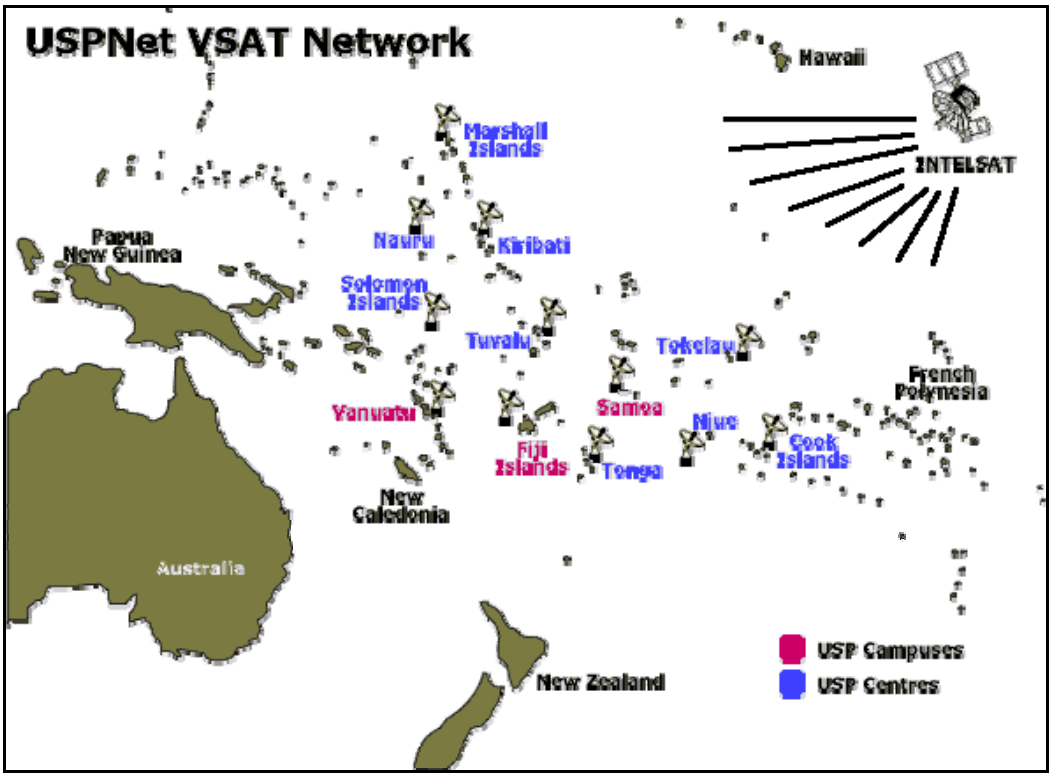

Figure 1: Map Showing the Member Countries of USP Region

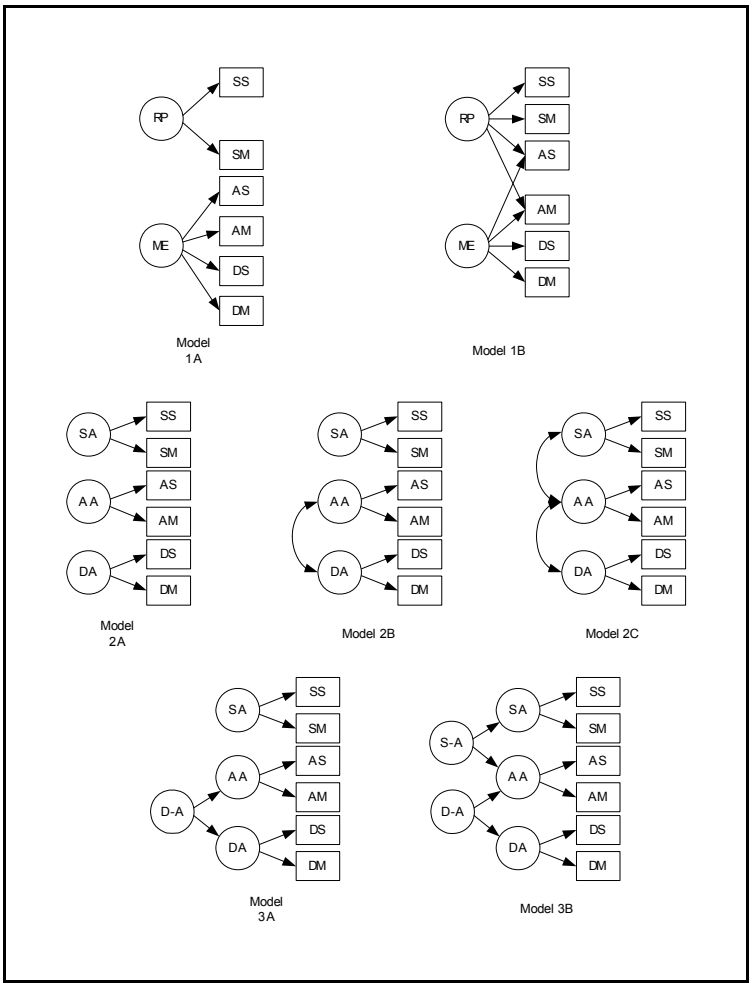

Figure 2. Seven *a priori* structural models of the SPQ (Model 1A to Model 3B). Keys: SS = Surface strategy, SM = Surface motive, DS = Deep surface, DM = Deep motive, AS = Achieving surface, AM = Achieving motive, ME = Meaning, RP = Reproducing.

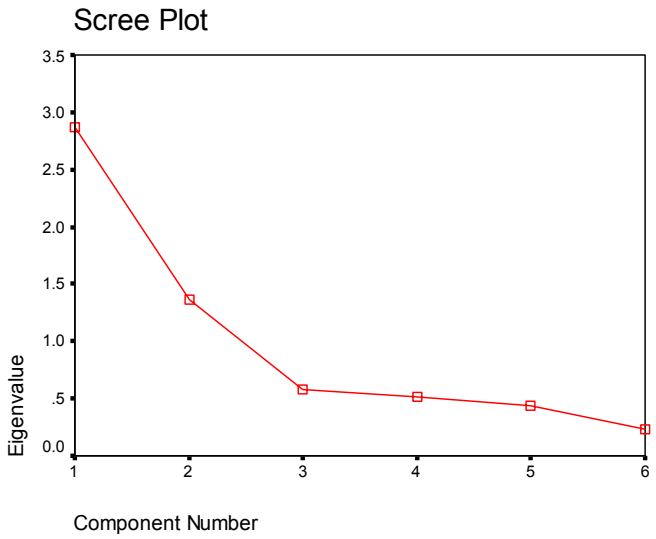

Figure 3. The Factor scree plot for study approaches.

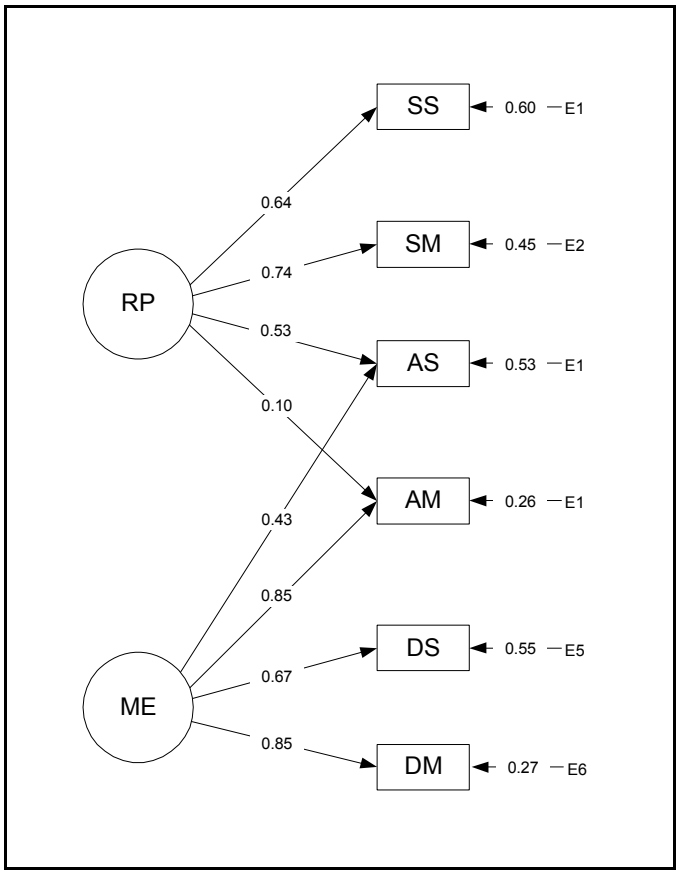

Figure 4: Complete standardized solutions of the model (Model 1B) showing the relationships between the different styles of learning. Keys: variables in circles are latent constructs and variables in squares are observable measures; RP = Reproducing, ME = Meaning, SS = Surface strategy, SM = Surface motive, AS = Achieving strategy, AM = Achieving motivation, DS = Deep strategy, DM = Deep motive. All paths are statistically significant at 5% level.

Table 1. Mean, standard deviation and Cronbach alpha for subscales of SPQ Questionnaire (N = 159)

	Mean			**SD**			**Alpha**
	Total	Mal	Fem	Total	Mal	Fem	
SPQ							
Surface motive	5.59	5.46	5.71	0.79	0.84	0.73	0.55
Surface strategy	5.35	5.36	5.35	0.69	0.72	0.67	0.45
Deep motive	5.80	5.65	5.93	0.65	0.70	0.58	0.56
Deep strategy	5.72	5.60	5.83	0.70	0.73	0.67	0.75
Achieving motive	5.67	5.63	5.71	0.75	0.80	0.70	0.62
Achieving strategy	5.60	5.46	5.72	0.81	0.84	0.77	0.79

Table 2. Fit Indexes of First and Second-order Factor Models

Model	Description	*Df*	$\chi 2$	*CFI*	*NNFI*
1A	Two-factor model	8	42.59	0.89	0.80
1B	Two-factor model with shared indicators	7	17.84	0.97	0.93
2A	Three-factor model	9	174.35	0.48	0.13
2B	Three-factor model with correlation b/w (DA) and (AA)	8	46.70	0.88	0.77
2C	Three-factor model with correlation b/w (DA) and (AA), and (SA) and (AA)	7	44.74	0.88	0.75
3A	Higher-order factor model with factors b/w (DA) and (AA)	7	46.70	0.88	0.73
3B	Higher-order factor model with factors b/w (DA) and (AA), and (SA) and (AA)	4	38.00	0.89	0.60

Note: *NNFI* = Non-Normed Fit Index; *CFI* = Comparative Fit Index.