# Affective engagement: A person-centred approach to understanding the structure of subjective learning experiences.

Sarah Buckley, Galit Hasen and Mary Ainley, The University of Melbourne

s.buckley@pgrad.unimelb.edu.au
g.hasen@pgrad.unimelb.edu.au

Paper presented at the annual meeting of the Australian Association for Research in Education, Melbourne, November 29 – December 2, 2004

**BUC04762**

## Abstract

Accounts of students' learning have increasingly emphasised the role of affective engagement in achievement settings. Although most studies have focused on negative emotional experiences such as anxiety, more recent studies have investigated the role of positive emotions. This study examines the structure of students' subjective learning experiences in relation to individual interest profiles. We measured two components of affect: activation as positive arousal that indicates engagement, and valence as an evaluative quality of the students' experience. Senior secondary students (females, N=162) completed measures of individual interests, curiosity and prior knowledge, read three social issues texts and then answered some questions relating to the texts. Each text was divided into three sections and at the end of each section students completed separate activation and valence measures. Three individual interest profiles were generated using cluster analysis, and dynamic patterns of activation were tracked for each group. Our findings using individual interest profiles illustrate the interactive engagement processes between students and specific tasks. Additionally, students reported a wide range of emotions, both positive and negative, indicating the broad and content-specific nature of students' emotional experiences while engaged in academic tasks.

The decline in adolescent students' classroom motivation is of increasing concern to educators and parents (Hidi & Harackiewicz, 2000). It is imperative to investigate adolescent's engagement processes in achievement settings to understand this trend (Krapp, Hidi & Renninger, 1992; Schiefele, Krapp & Winteler, 1992). The following study is an extension of a body of research identifying the function of interest in achievement activity. Most interest theorists adopt one of two perspectives, either researching the construct from the perspective of the person/ student, or from the situation/ classroom. The present study aimed to take an interactionist perspective and asserts that it is vital to structure learning contexts to stimulate students' interest. At the same time, the contribution of the individual is appreciated, that is, the interests students bring to their own learning. Further, we will examine some of the characteristics of interest from the perspective of identifying how it functions as an achievement emotion (Ainley, Buckley & Hasen, 2004). Previous studies have investigated affect in academic settings from either a prospective or retrospective position however little is known about the range of affective experiences (apart from anxiety) while engaged or disengaged with specific leaning activities. In this study we investigated students' individual interest profiles and then monitored anticipatory interest responses to task topics. Finally we examined the specific affective responses that develop across the course of the activity.

***The Character of Interest***

Interest, at its most basic level, can be described as the psychological state that results from the interaction between a person and their environment (Krapp, Hidi & Renninger, 1992; Renninger, 1992). *Individual interest* has been explained as the lasting or enduring disposition of a person that affects engagement and attention (Hidi & Harackiewicz, 2000; Ainley & Hidi, 2002). It has also been linked to positive affect (Bergin, 1999). In academic achievement, Ainley, Hidi and Berndoff (2002) suggested that the individual interests that influence learning involve different levels of generality, for instance, a student's fascination with learning in general, down to interest in a specific domain, such as science.

At the most general level, curiosity has been studied as a way to measure a general interest in learning. Ainley (1993) established that curiosity can be represented as a two-factor construct. The first, breadth of interest (BOI) is typified by an attraction to sensation-seeking activities. The second, depth of interest (DOI) is characterised by a desire to understand novel stimuli, whether they are concepts, objects or events, and is considered closely associated with academic achievement and learning enjoyment (Ainley, 1989). In the

present study, individual interest ratings for five domains – Social Issues, Political Issues, Personal Health, Sport and Science – and participants' curiosity scores were used to create profiles of individual interest. In creating these profiles, a person-centred approach was adopted. Developed as a branch of the holistic-interactionistic paradigm, this approach focuses on the notion of individuals as complex beings, consisting of more than simply fragmented parts (Bergman, 2001; Von Eye & Bergman, 2003). Person 'profiles' are generated across critical, predictor variables, the objective being to find homogeneous subgroups within the participant group (Hansen, 1999; Niemvirta, 2002).

While individual interest is a stable tendency, *situational interest* is the state of interest activated by specific features of the environment (Krapp, Hidi & Renninger, 1992; Ainley, Hidi & Berndoff, 2002). As Mitchell (1993) indicated, teachers cannot control the individual interests that students bring, but can attempt to 'catch' and 'hold' interest in the classroom. *Topic interest* is considered to have both individual and situational properties, and is said to occur when a word, phrase, or paragraph triggers interest (Ainley, Hidi & Berndoff, 2002). This state of heightened arousal or focused attention in the individual is measured in their anticipatory response when asked to predict how interesting a certain topic or phrase is expected to be. Both topic and situational interest have been linked to positive and negative affect (Bergin, 1999).

***Interest and Affect***

Pekrun et al.'s research (2002a) on 'academic emotions' refers to emotions that are directly linked to academic learning, classroom instruction and achievement and the process of studying, and are experienced in school or university settings. Although Pekrun et al. (2002b) observed that equally high levels of both positive and negative emotions were reported, there is still a broad spectrum of issues that has not been explored regarding the nature of academic emotions.

The status of interest itself as an emotion is strongly debated. Izard and Ackerman (2000) described interest as providing the "motivation and energy mobilisation for engagement and interaction" (p.257). This understanding of interest acknowledges its activating and arousing function which allows a student to become engaged with a task. When a student becomes open to the learning experience, that is while they are positively activated, they may have a range of other affective experiences, each with its own valence (positive or negative). Additionally, the intensity of the particular emotion experienced is

another measure of the extent of the student's arousal. Thus the process of interest may develop into complex affective responses.

Whereas Pekrun (2002) classified particular academic emotions (enjoyment, hope, pride, relief, anger, anxiety, shame, hopelessness and boredom) along dimensions of activation and valence, this study focuses on teasing out the activation and valence aspects of the student's subjective experience. This study specifically addresses the activation and valence issue in order to understand the structure of students' affective responses, and modifies the measure of affect used in previous studies by Ainley et al. (2002). An activation scale requiring a rating from bored to interested was included as an indicator of the level of student openness to engage with the texts. Separate valence panels presented a range of both positive and negative emotions for students to use to show how they were feeling. Using these two dimensions to measure affect enabled us to examine students' affective responses in a more complex manner. This methodology acknowledges that emotions are comprised of both activation (a level of interest or openness to learning) and valence (the particular feeling) components. Thus, triggering of interest in response to an achievement activity has a high activation component with the possibility of also involving further emotions of both positive and/or negative valence. Additional emotions that may be activated may also vary in intensity.

The direction of these developments in measuring achievement emotions, by separating activation and valence, is supported by other studies. Alvarado (1997) measured direct emotional responses to film clips and found that arousal and interest responses were qualitatively different to valence responses, that is, participants were reporting emotion experiences along two dimensions, one of arousal and one of valence, and these dimensions varied independently of each other. However, significant relationships were found between the magnitude of arousal reported and the magnitude of valence reported. Therefore in the present study, a separate measure of intensity is added to the valence scale, which in addition to the activation scale, measures students' arousal levels.

Extending the findings of Alvarado (1997) that activation and valence function independently, we expect to find that these two dimensions are distinguishable, but not unrelated. Different situations may prompt differing degrees of independence or intercorrelation. As this study focuses on achievement settings, components of affect were measured in relation to students' engagement with reading social issues texts.

***Interest: The Person and the Situation***

Relationships within the broad construct of interest raise important theoretical questions concerning the ways personal and situational factors combine to produce the active state of interest. Hidi & Harackiewicz (2000) argued that although they are two separate factors, they do not act as "dichotomous phenomena". Rather, they have both distinct and cooperative roles in the learning process (Ainley & Hidi, 2002; Hidi & Harackiewicz, 2000). In the present study, this was investigated in the relationship between the individual interests students brought to a task (in the form of individual interest profiles), and the interest generated by stimulus/task properties (indexed by topic interest and activation ratings).

***Aims and hypotheses.***

The present study intends to explore the contribution of individual interest profiles to interest or engagement that is triggered (topic interest) and maintained (activation) when reading three social issues texts. The aim of this study is to monitor students' topic interest as an expectation response and its relationship with affective engagement across the course of reading texts. Specifically, we investigate students' affective engagement processes by separating activation and valence components and examining their interrelationships.

## Method

***Participants***

Participants were 163 girls in Year ten and eleven Psychology classes. The mean age of the sample was 15.6 years (*SD*=0.89), with a range of 14-18 years.

***Measures and Materials***

An adaptation of the interactive computer program *Between the Lines* (BTL, Ainley et al., 1997) was used to gather all the data for this study. The program records both behavioural and self-report measures of students' reactions to the texts including their choice of text order and their affective responses.

***Texts.*** Three social issues texts were presented with strong human-interest aspects. The three topics were euthanasia, refugees and asylum seekers and ecotourism. Social issues texts with human interest components were selected to maximise participant engagement with the texts and encourage interest maintenance (Bergin, 1999; Hidi, 1990). These are also the types of texts used in senior English classes. The length of each text was approximately 800 words in total, and was presented in three sections of approximately 230 words. The first two sections presented the human interest stories components, while the third section presented information about the issue and raised both sides of the dilemma. For example, the third

section of the text on euthanasia outlined definitions of euthanasia and presented arguments given by the anti and pro euthanasia movements. Students were required to read all three texts and were able to choose the order in which they read them.

***Specific Measures***

***Curiosity.*** Curiosity, as a general disposition of individual interest, was measured via the 18-item short form of the Two Factor Curiosity Scale (Ainley, 1987). The two factors, Breadth of Interest (BOI) and Depth of Interest (DOI) are each represented by nine items on the scale, which have demonstrated robust psychometric properties ($\alpha = 0.89$, Ainley 1986). Participants were asked to rate how they felt with respect to each of the activities and experiences described in the items on a five-point Likert scale (1 = do not like at all/ 5 = like very much). Average scores were calculated for the BOI and DOI subscales.

***Individual interest domains.*** At the more specific level, individual interest was measured in five domains – Political Issues (PI), Popular Music (PM), Science (SC), Social Issues (SI) and Sport (SP). These domains were chosen to represent subjects of popular culture (PM and SP) and academic areas (SI, PI and SC). Participants were asked to rate on a five-point Likert scale (1 = not at all/ 5 = a lot) their interest level in each area. They were also asked to rate how much they valued and knew of each domain, however these values and knowledge ratings were not used in the current study.

***Topic Interest.*** This variable was measured by presenting the three topics on a screen and asking participants to give ratings of how interesting they expected each topic to be. Ratings were recorded on a five point Likert-type scale (1=not at all; 5=a lot).

*Affect*. There were two measures of affect recorded on three scales at the end of each section of text. The first was a recording of activation or arousal asking *'How interested are you feeling now?'* Responses were made using a five point Likert-type scale (1=bored to 5=interested). This produced three activation scores for each text.

The valence measure included a panel of ten face icons with instructions to *'Select from the panel to show how you are feeling now'* and a second intensity screen. The following ten emotions were included: happy, hopeful, relieved, proud, sympathetic, sad, angry, disgusted, anxious and shameful. These emotions were selected from Izard's basic emotions (1977) and Perkun et al.'s achievement emotions (2002), according to the criterion of including a broad range of emotions, equal positive and negative emotions and relevance to the range of texts presented.

When the valence panel was presented participants selected an emotion icon. They were then asked to rate the intensity of their chosen emotion, *'Show how (selected emotion) you*

*are feeling'* using a Likert-type scale (1= a little to 5=a lot). Participants were then given the option of choosing a second emotion on an identical valence panel. This time an 11th icon, 'neutral', appeared on the screen allowing students the option of not choosing a second emotion. If they did select a second emotion, the intensity scale appeared again so that participants could rate the intensity of that emotion. If they chose 'neutral' the program moved to the next task and zero intensity was recorded. The overall sequence was activation, valence, intensity, valence, intensity.

## Results

***Individual Interest Profiles and Topic Interest.***

Cluster analysis was used to identify individual interest profiles. TwoStep Cluster analysis was performed using the DOI and BOI curiosity variables and participants' ratings of the 5 individual interest domains (Social Issues, Political Issues, Science, Popular Music and Sport). Both stopping criteria within the program (the Akaike and Bayesian Information Criterion) supported a 3-cluster solution. Figure 1 illustrates the means on each clustering variables for each cluster.

A multivariate analysis of variance (MANOVA) was conducted to determine whether there were significant differences in variable ratings between the three clusters. Box's M was violated. However following the suggestion of Huberty and Petoskey (2000), because the logarithms of the covariance matrices were similar (-5.29, -3.69, -3.17, -3.58), it was considered appropriate to assume equality of the covariance matrices. There was a significant difference in variable ratings between the three clusters (Pillai's Trace = 1.28, $F(14,308) = 39.27$, $p<.0001$, $\eta^2 = .29$).

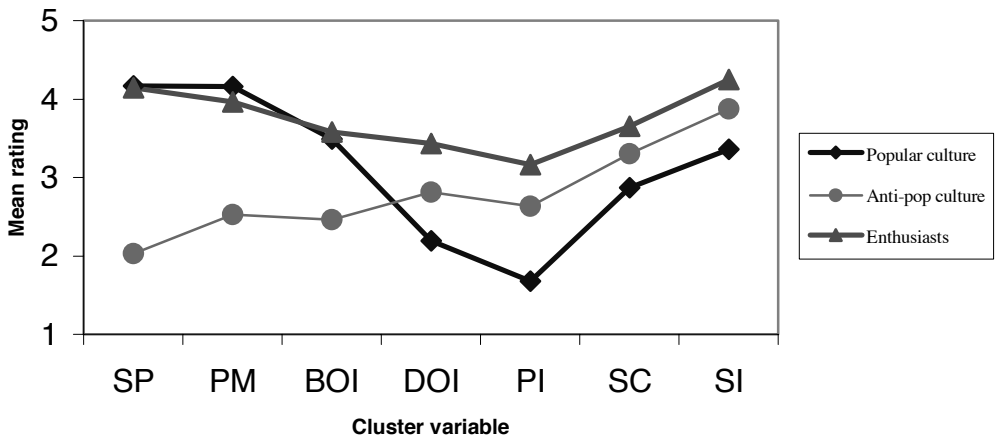


Figure 1. Variable centroids across the three clusters

***Popular culture***. Cluster 1 (n=63) consisted of participants highly interested in popular music and sport and reporting above-average BOI. This group reported the lowest interest in the academic domains (SC, SI and PI).

***Anti-pop culture***. Cluster 2, the smallest group (n=30) consisted of participants exhibiting an average interest in all of the academic domains coupled with low interest ratings for sport, popular music domains and the BOI style. This profile is in direct contrast with the 'popular culture' cluster on these popular culture domains.

***Enthusiasts.*** Cluster 3 (n=69) was the largest group and consisted of participants with a high ratings for all of the individual interest variables, both popular culture and academic domains. They also had high scores on both BOI and DOI curiosity subscales.

Mean topic interest ratings were investigated within the three individual interest profiles identified. These relationships are represented in Figure 2.

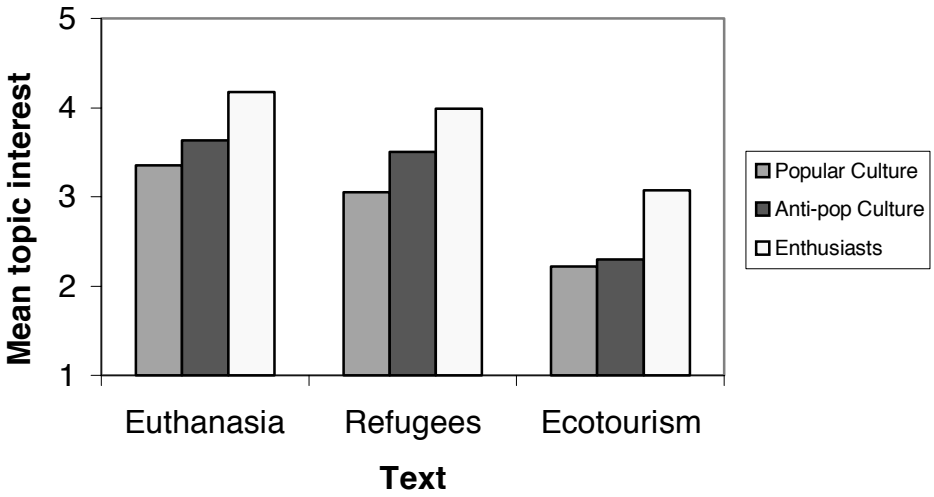


*Figure 2*. Mean topic interest for each text according to cluster membership

'Enthusiasts' showed the highest levels of topic interest, the 'popular culture' group showed the lowest while the 'anti-pop culture' group were in between the two.

To confirm the statistical significance of these results, a one-way repeated measures MANOVA was conducted. The independent variable was cluster membership and the within-subjects, dependent variables, were topic interest ratings for the three texts. Both Mauchly's assumption of sphericity and the assumption of equal covariance matrices, tested by Box's M, were met. A test of within-subjects effects revealed a significant main effect of text ($F(2, 318) = 68.37$, $p<.0001$, $\eta^2 = .30$) while a test of between-subjects effects indicated

that cluster membership had an independent main effect on topic interest ($F(2, 159) = 33.06$, $p<.0001$, $\eta^2 = .29$). The more conservative Scheffé test was used to conduct post-hoc comparisons (Tabachnick & Fiddell, 2001). There were significant differences between topic interest responses of the 'enthusiasts' and those of the other two groups, for both the Ecotourism and Euthanasia texts (see Figure 2). Therefore, individual interests represented by the 'enthusiasts' profile were associated with higher topic interest ratings in these texts.

***Patterns of Activation and the Profiles of Individual Interest***

Relationships between the individual interest profiles and patterns of activation (activation ratings given at each of the three text sections) for the three texts were examined.The effect of cluster membership on levels of activation was investigated with a two-way, repeated measures MANOVA. As Mauchly's test of sphericity was not met, the Greenhouse Geisser test was interpreted (Tabachnick & Fidell, 2001). Within-subjects tests of the text and activation main effects were both significant, yielding $F(1.943, 286) = 59.95$, $p<.0001$, $\eta^2 = .30$ and $F(1.759, 286) = 110.02$, $p<.0001$, $\eta^2 = .44$, respectively. Levels of activation varied according to text content and text section. Significant interaction effects were found for text and activation ($F(3.60, 572) = 28.47$, $p<.0001$, $\eta^2 = .17$) and for cluster membership and activation ($F(3.52, 286) = 2.95$, $p<.05$, $\eta^2 = .04$). There was no significant interaction between text and cluster membership.

Mean activation responses for the Euthanasia, Refugees and Ecotourism text are represented in Figures 3, 4 and 5, respectively.

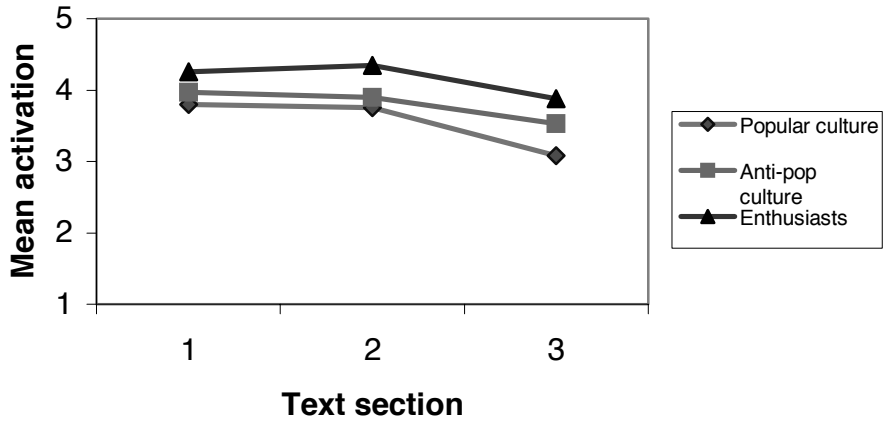


*Figure 3*. Euthanasia: Mean activation according to cluster membership.

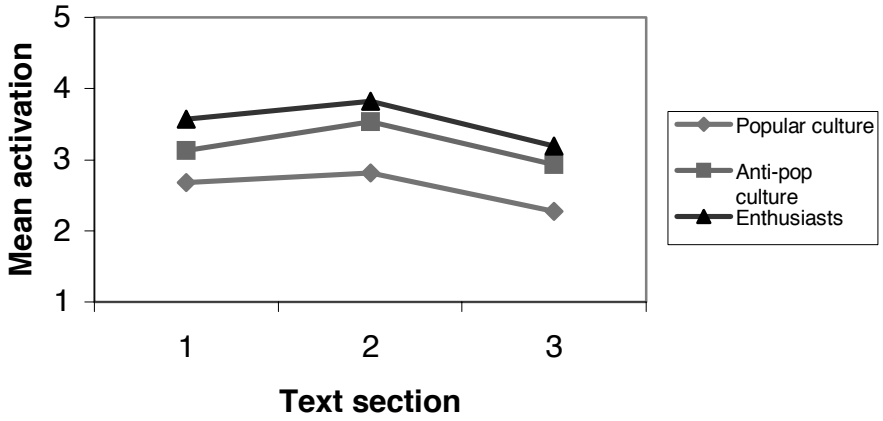


*Figure 4*. Refugees: Mean activation according to cluster membership.

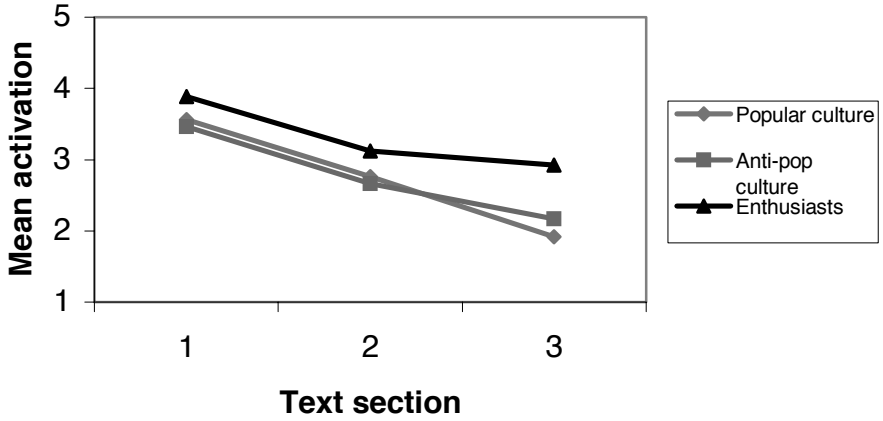


*Figure 5*. Ecotourism: Mean activation according to cluster membership

Figure 3 illustrates that activation for this text was quite high with no cluster mean dropping below the scale midpoint of 3. 'Enthusiasts' sustained a high pattern of activation throughout the text and were the only group in which activation increased slightly between the first and second text sections. A Scheffé test indicated that activation responses from the 'enthusiasts' in the second section were significantly greater than the other groups.

Figure 4 reveals levels of activation for the Refugees text were lower than for the Euthanasia text. The 'popular culture' group consistently responded with lower activation. A Scheffé test revealed that there was a significant difference between activation in the second text for the 'popular culture' participants and activation responses from the other two groups. As for the Euthanasia text, the 'enthusiasts' responded with higher levels of activation, the 'popular culture' participants showed the lowest activation and the 'anti-pop culture' were in between.

Figure 5 shows that activation levels reported for the Ecotourism text were lower and steadily decreased throughout the text. Unlike trends observed in the Euthanasia and Refugees texts, 'anti-pop culture' and 'popular culture' participants reported very similar levels of activation for the first and second text sections. A Scheffé test revealed a significant difference between 'enthusiasts' activation ratings and the other two groups in the third text section.

***Topic Interest, Activation and Intensity Components***

The general pattern of responses for activation and intensity of valence components across time for each text are summarised in Figure 6. These patterns show that activation and intensity of valence followed similar trajectories across time. Generally activation means were slightly higher than valence intensity means for the euthanasia text. This was not the case for part three of the ecotourism text where the mean intensity rating was higher that the mean activation rating. For all three sections of the refugees text activation and valence intensity means were indistinguishable.

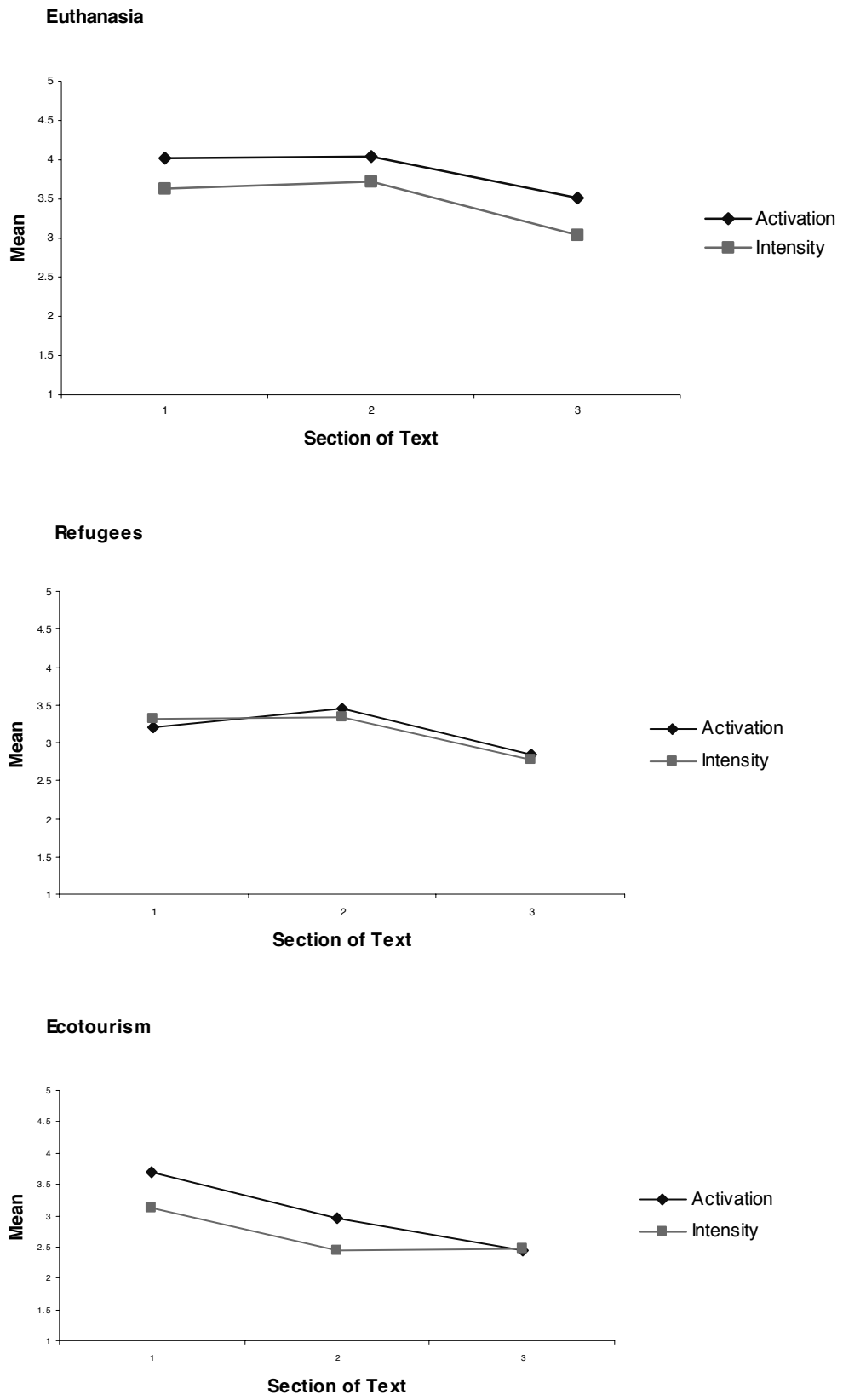


*Figure 6*. Patterns of activation and valence intensity means across time for each text.

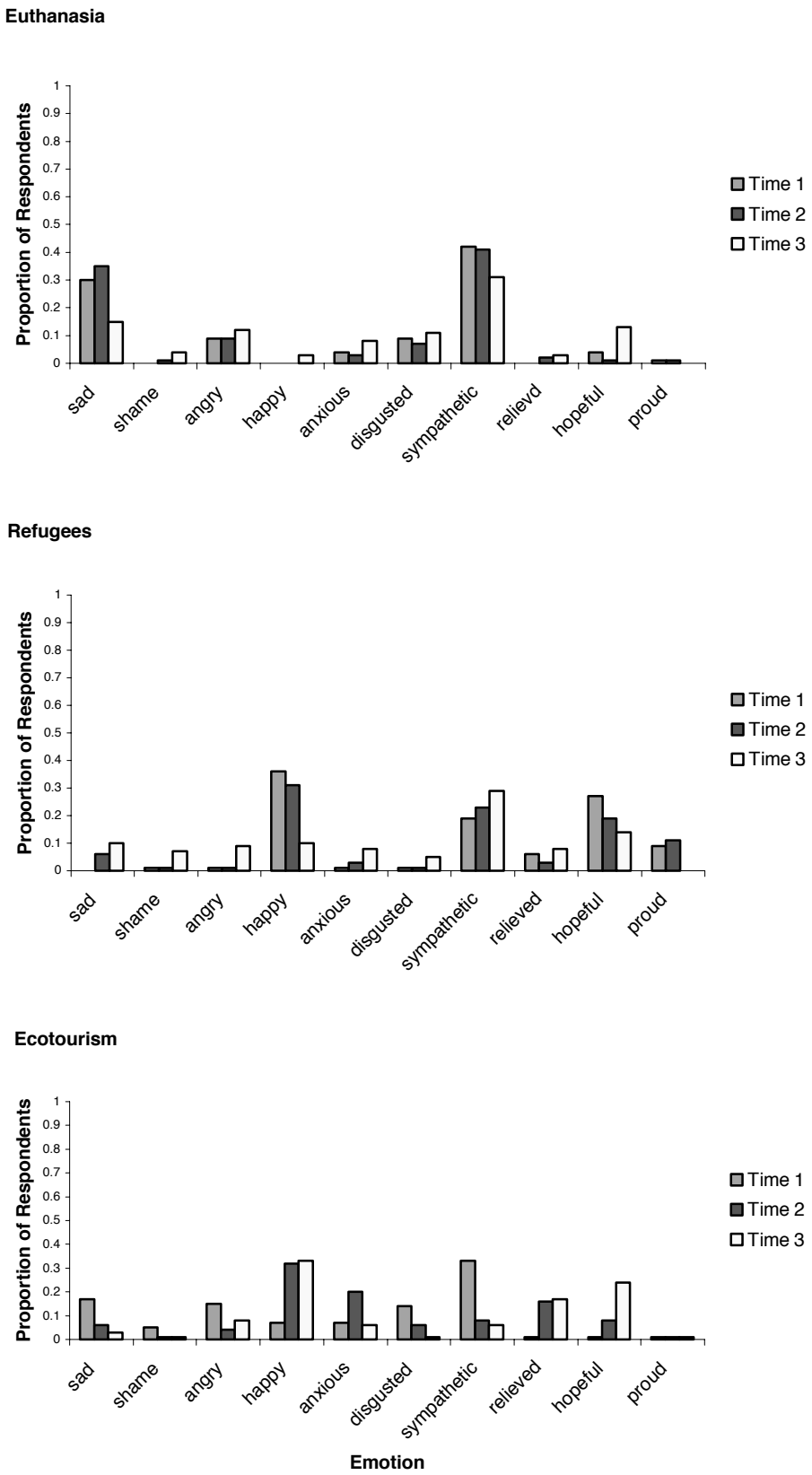


*Figure 7*. First emotion selection at each time for the euthanasia, refugee and ecotourism texts.

***Valence.*** The analyses reported have only used the emotions selected from the first valence screen. Figure 7 displays the distributions of the specific emotions reported for each text section for the euthanasia, refugees and ecotourism texts. These are presented as proportions of the total number of respondents. For the euthanasia and refugee texts, students reported relatively similar emotions at times one and two. Students largely reported feeling sympathetic and sad at time one and two for the euthanasia text, whereas at time three, a wider variety of other negative emotions were also reported, as well as hopeful. For the refugees text, happy, hopeful and sympathetic were frequently reported at times one and two, while at time three a wide range of emotions were reported, although sympathy was still the most frequent. The ecotourism text showed a different pattern, with different emotion frequencies at each time. Sympathetic, angry and sad were most frequently reported at time one, happy, anxious and relieved at time two and happy, hopeful and relieved at time three.

***Activation and Valence Components***

A series of categorical regressions was performed for each text. Because of issues of multicollinearity, activation at time two was not included in the analyses (Hair, Anderson, Tatham & Black, 1998). In the regression models measurements were included in the real-time order of their collection.

Figure 8 shows that topic interest does not predict valence for any text. The predictive sequence of valence from the end of the first section of text to the end of the third section was significant for the euthanasia and refugees texts but not for ecotourism at time one. The predictive sequence from activation across time was also significant. Significant predictive relationships were identified between activation at time one and valence at specific times. Some of these relationships are examined further using cross tabulations to identify specific emotion contingencies.

For the euthanasia text at time one, students who reported feeling sympathetic tended to also report a very high activation level. For the refugees text, students who reported feeling hopeful at time two tended to report hopeful at time three. Students who reported feeling happy at time two also reported happy at time three. Of those who reported feeling happy at time three, there was a tendency to also report a high activation level at that time. For the ecotourism text at time three, when students reported a very low activation level, they tended to report feeling anxious, disgusted, shameful or angry. Thus activation at time one was significantly predictive of specific valence at critical times.

Euthanasia Text

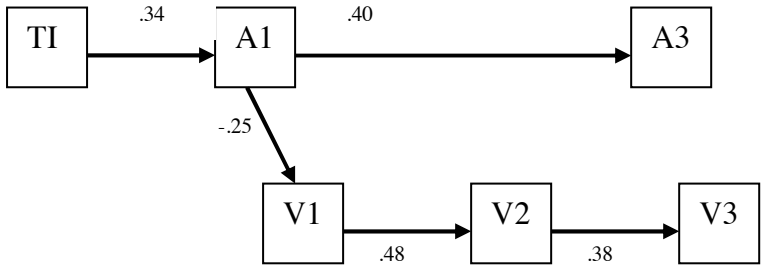


Refugees Text

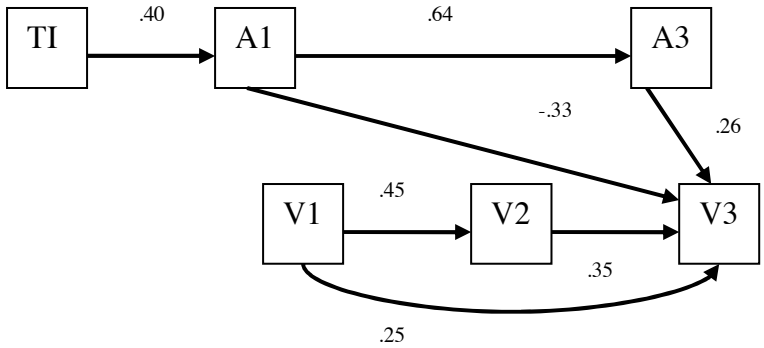


Ecotourism Text

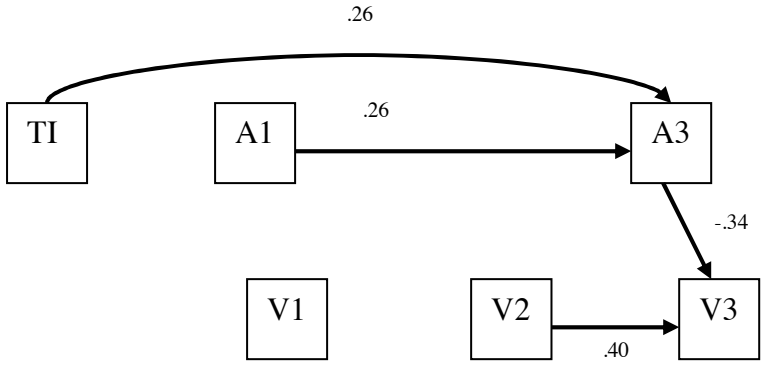


*Figure 8*. Significant categorical regression paths (with standardised coefficient weights of .25 and over) for each text from topic interest to activation and valence across time.

## Discussion

***Individual Interest Profiles.***

Analysis of students' individual interest responses revealed three profiles labelled the 'enthusiasts', 'anti-pop culture' and 'popular culture' groups. These profiles are not presented as a typology (Ainley, 1993), but reflect patterns of students' individual interests as measured by BTL. Profile patterns revealed that DOI was clustered with individual interest in academic related domains (Science, Political Issues and Social Issues), and BOI was clustered with interest in popular culture related domains (Sport and Popular Music). Further research could explore possible factors contributing to the development of low and high academic interest patterns, like those represented in the 'popular culture' and 'enthusiast' group respectively, in order to promote better classroom motivation and learning. Within the present study, the person-centred approach facilitated the study of many relationships. Individual interest profiles were valuable as a basis from which patterns of other phenomena (namely, topic interest and activation) were understood.

***Individual Interest Profiles, Topic Interest and Activation.***

A significant main effect of profile membership on topic interest was found. In particular, the 'enthusiasts' had significantly higher topic interests scores for the Euthanasia and Ecotourism texts than did other students. Interestingly, patterns of topic interest mirrored patterns of academic interest within individual interest profiles, with 'enthusiasts' showing the highest levels, the 'anti-pop culture' group showing average scores and the 'popular culture' group showing the lowest interest. Clearly, the individual interests students brought to the task were important in shaping responses to texts-titles, which is evidence of interaction between person and situation effects. This relationship also extended into students' direct engagement with the texts. Activation ratings of 'enthusiasts' were significantly higher than other students in sections of the Euthanasia and Ecotourism text, while those of the 'popular culture' group were significantly lower in the second Refugees text-section. To further explore the contribution of individual interest profiles to activation ratings (and topic interest), it would be advantageous to include a greater range of texts illustrative of the many subject areas students are exposed to in the classroom.

***Interest, The Person and The Situation.***

The complex relationships found between individual interest profiles, topic interest scores and activation ratings are indicative of the interaction that existed between what students brought to the task and their engagement with texts. Findings demonstrate that both individual factors (in the form of profiles) and situational factors (text-material) interact to

trigger the active state of interest (topic interest and activation). These relationships suggest that it is critical to take an interactionist perspective and consider the individual interests developed outside the classroom in order to understand task engagement. As Hidi and Harackiewicz (2000) commented, individual and situational interests are not "dichotomous phenomena" and hence, should not be studied as such.

***Activation and intensity of valence***

The intensity associated with specific valence was positively related to the activation level at critical measurement times throughout the texts. The patterns of these dimensions followed similar trajectories across time and activation at each measurement time was strongly predictive of the particular intensity at that time. Thus when students reported high interest in a text segment, they also reported strong feelings. This finding supports Alvarado (1997) who found that activation was more related to the magnitude of valence than to the nature of the particular valence. Izard and Ackerman (2000) argue that activation is the energizing and motivating element that allows students to become engaged with a task. Since the intensity of a particular valence captures the degree of emotional engagement with a task, it is not surprising that these results point to a high degree of consistency between these two measures. Both measures reflect the energizing elements of affect. Activation reflects students' overall arousal levels and intensity reflects the arousal level associated with specific emotions. Each activation and intensity rating was also strongly positively predictive of the next stage in the respective progression, which gave two indications that students remained engaged throughout the text.

***Activation and valence***

The results showed that at particular measurement times, arousal levels were associated with particular emotions. The results of the present study are discussed in relation to previous findings. In relation to emotional responses to film clips, Alvarado (1997) found that participants responded in a qualitatively different manner to activation and valence scales, finding the two dimensions to be independent. The present study largely confirms previous research, finding that activation and valence scales access qualitatively different elements in engagement processes. However, contrary to previous research, this study found that activation and valence are related. At some critical measurement times the specific emotions students reported were contingent on the level of arousal they reported. This discrepancy from previous studies' findings could be due to the effects of different situations prompting differing degrees of independence or intercorrelation between the two dimensions.

Alvarado's study measured emotion in relation to film clips that presented pleasant or unpleasant emotional stimuli, while the current study focused on achievement settings, presenting social issues texts that were designed to both stimulate students' academic arousal in the content and allow them to become emotionally engaged.

Clearly, debate still exists about how to separate affective components. A recent paper published in September, 2003 (Egloff, Schmukle, Kohlmann, Burns & Hock, 2003) found that components of joy, interest and activation could be differentiated in the positive affect scale of the PANAS (Positive and Negative Affect Schedule). Although Egloff et al. defined interest and activation as separate components, on closer inspection, their findings are not dissimilar to our own. Egloff et al clustered the descriptions 'alert', 'attentive' and 'inspired' with activation, and 'strong' and 'determined' with interest. These classifications are almost synonymous with the present study's dimensions of activation as the level of students' arousal, and intensity as the strength of students' reported emotions. In our study, we have chosen to classify interest and activation together in accordance with Izard and Ackerman's (2000) description of interest as the energizing and motivational element of engagement. In addition, Egloff et al. found that the dimensions interest and activation showed the strongest associations. This supports our findings that activation and the intensity of emotions are highly related.

***Summary and Conclusion***

Results of this study revealed that individual interests students' brought to a task influenced their responses to text-titles, and also influenced students' level of engagement with texts over the course of reading. 'Enthusiasts', 'anti-pop culture' and 'popular culture' groups each demonstrated high, intermediate and low topic interest and activation patterns respectively, suggestive of the person/situation interaction. Investigation of this dynamic interaction was facilitated via the use of a person-centred approach, which was also valuable in describing common patterns of individual interest. Findings suggest that recognizing the significant influence of both the person and situation in achievement settings is vital in order to address motivational processes in the classroom.

This study has also illustrated the contingencies between expected interest and the structural nature of the components of affect. Activation, the energising element of affect, and valence, the particular quality of emotion, were found to be distinct yet related dimensions of students' affective experiences whilst reading social issues texts. Topic interest was strongly predictive of activation levels but not of specific valence. Activation

and the intensity of specific valence were strongly related throughout the text. The specific emotions students reported were also associated with particular intensity levels. Depending on text content, activation levels predicted the specific valence students reported at critical times. By employing innovative methodology we were able to concurrently monitor students' changing patterns of emotional engagement as they proceeded through the task. Overall, by illuminating students' dynamic affective processes, this study addresses the concerning decline in adolescent students' academic motivation.

## References

Ainley, M.D. (1987). The factor structure of curiosity measures: Breadth and depth of interest curiosity styles. *Australian Journal of Psychology, 39*, 53-59.

Ainley, M.D. (1993). Styles of engagement with learning: Multidimensional assessment of their relationship with strategy use and school achievement. *Journal of Educational Psychology, 85(3),* 395-405.

Ainley, M., & Hidi, S. (2002). Dynamic measures for studying interest and learning. In P.R. Pintrich & M. L. Maehr (Eds.), *Advances in motivation and achievement: New directions in measures and methods* (Vol. 12, pp. 43-76). Amsterdam: JAI Press.

Ainley, M., Hidi, S. & Berndorff, D. (2002). Interest, learning and the psychological processes that mediate their relationship. *Journal of Educational Psychology, 94*(3), 545-561.

Ainley, M., Hidi, S. & Tran, D. (1997). *Between the Lines* (*BTL*). Interactive Software, Psychology Department, University of Melbourne, Melbourne, Australia.

Alvarado, N. (1997). Arousal and valence in the direct scaling of emotional response to film clips. *Motivation and Emotion, 21(4),* 323-348.

Bergin, D. A. (1999). Influences on classroom interest. *Educational Psychologist, 34,* 87- 98.

Bergman, L.R. (2001). A person approach in research on adolescence: Some methodological challenges. *Journal of Adolescent Research, 16,* 28-53.

Egloff, B., Schmukle, S. C., Kohlmann, C. W., Burns, L. R., & Hock, M. (2003). Facets of dynamic positive affect: Differentiating joy, interest and activation in the Positive and Negative Affect Schedule (PANAS). *Journal of Personality and Social Psychology, 85*(3), 528-541.

Hair, J. F., Anderson, R. E., Tatham, R. L., & Black, W. C. (1998). Multivariate data analysis (5th ed.). New Jersey: Prentice-Hall International.

Hansen, K-H. (1999). A qualitative assessment of student interest in scienceeducation. *Studies in Educational Evaluation, 25,* 399-414.

Hidi, S., & Harackiewicz, J. (2000). Motivating the academically unmotivated: A critical issue for the 21st century. *Review of Educational Research, 70,* 151-179.

Huberty, C., and Petoskey, M.D. (2000) Multivariate analysis of variance and covariance. In H.E.A. Tinsley and S.D. Brown (Eds.) *Handbook of Applied multivariate statistics and mathematical modelling* (pp.183-208), San Diego: Academic Press.

Izard, C. E. (1977). *Human emotions*. New York: Plenum Press.

Izard, C. E. & Ackerman, B. P. (2000). Motivational, organisational and regulatory functions of discrete emotions. In M. Lewis & J. M. Haviland-Jones (Eds.), *Handbook of Emotions* (2nd ed.). (pp. 253-265). New York: Guilford Press.

Krapp, A., Hidi, S., & Renninger, A. (1992). Interest, learning and development. In K. A. Renninger, S. Hidi, & A. Krapp (Eds.), *The role of interest in learning and development* (pp. 3-25). Hillsdale, NJ: Erlbaum.

Mitchell, M. (1993). Situational interest: Its multifaceted structure in the secondary school mathematics classroom. *Journal of Educational Psychology, 85,* 424-436.

Niemivirta, M. (2002). Individual differences and developmental trends in motivation:Integrating person-centred and variable-centred methods. In P.R. Pintrich, & M.L. Maehr (Eds.), *Advances in motivation and achievement, Vol 12: New Directions in Measures and Methods,* (pp. 241-275). Oxford, UK: Elsevier Science.

Pekrun, R., Goetz, T., Titz, W., & Perry, R. P. (2002a). Academic emotions in students' self-regulated learning and achievement: A program of qualitative and quantitative research. *Educational Psychologist, 37,* 91-105.

Pekrun, R., Goetz, T., Titz, W., & Perry, R. P. (2002b). Positive emotions in education. In E. Frydenberg (Ed.), *Beyond coping: Meeting goals, visions, and challenges* (pp. 149-173). London, UK: Oxford University Press.

Renninger, K. A. (1992). Individual interest and development: Implications for theory and practice. In K. A. Renninger, S. Hidi, & A. Krapp (Eds.), *The role of interest in learning and development* (pp. 361-395). Hillsdale, NJ: Erlbaum.

Schiefele, U., Krapp, A., & Winteler, A. (1992). Interest as a predictor of academic achievement: A meta-analysis of research. In K. A. Renninger, S. Hidi, & A. Krapp (Eds.), *The role of interest in learning and development* (pp. 183-211). Hillsdale, NJ: Erlbaum.

Tabachnick, B.A., & Fidell, L.S. (2001) *Using Multivariate Statistics* (4th ed.). New York: HarperCollins.

Von Eye, A., & Bergman, L.R. (2003). Research strategies in developmental psychopathology: Dimensional identity and the person-oriented approach. *Development and Psychopathology, 15,* 553-580.